SNO-4132

FUNCTIONAL REQUIREMENTS FOR COMPLETE ENTRAINING/DETRAINING ARRANGEMENT OF PASSANGER COACHES COMPATIBLE WITH PLATFORM FOR INDIAN RAILWAYS

1. Introduction:

Presently, Indian Railway passenger coaches have appropriated design of complete entraining/detraining arrangement including door with fixing arrangement, footsteps and door handle compatible with platform of height 760mm to 840mm from rail level in such a way that a passengers uses a vertically straight parallel foot-steps during entraining from platform to coach floor and similarly during detraining from coach floor to platform. Door system in BG coaches of ICF design except SLRD is conforming to general arrangement drawings (drawing no-ICF SK-5-1-026 for body side door fixing arrangement, ICF STD-5-1-002 for Outer door assembly, SG10209 for body shell assembly for GS A/B coach with raised cross bearer, CC26115 for entrance hand rail and CC24105 for foot step arrangement. Door system of BG coaches of LHB design conforming to general arrangement drawings (drawing no.-LA51101 for entrance door mounting (R.H.) for AC coaches, LA51102 for body side entrance door (R.H.), 1 10113.0.10.100.001 for step complete mounting and 3 10113.0.10.210.001 for hand bar complete. Often, Railways have reported some cases of accidents like falling of passengers during entraining/detraining due to the horizontal as well as vertical gaps between platform and coach floor of the trains. Due to space constrains as per Diagram-1D and IRSOD followed for Indian Railways coach design, and due to coach behavior in dynamic conditions, the horizontal gap between platform and coach floor can't be disturbed, but redesigning of complete entraining/detraining arrangement including door with fixing arrangement, footsteps and door handle compatible with platform may be exercised. Indian Railway is desirous to review, exercise and upgrade this existing design of complete entraining/detraining arrangement compatible with platform for Indian Railways in such a way that steps (inclined type of standard size as per ergonomic comfort) between platform and coach floor can be provided for passengers comfort for entraining/detraining in Indian Railways Passenger Coaches.

2. Functional requirement for specification:-

Review, redesign and upgradation of above said complete entraining/detraining arrangement and it should meet the following functional requirements:

1. Design should be within Maximum moving dimensions (MMD) as mentioned in Diagram-1-D of Indian Railway schedule of dimensions (IRSOD-2004, latest) followed in Indian Railways. Best design of entraining/detraining arrangement shall be compatible with the platform of height 760mm to 840mm as shown in Diagram-1-D of Indian Railway schedule of dimensions (IRSOD-2004, latest).
2. Design should be as per Indian Anthropometric Dimensions for Ergonomic design practice.
3. Car body structural integrated tubular shell design should not be disturbed. Any change in structural members which may affect the car body shell integrity shall be avoided during redesigning work.
4. During redesigning work, interfacing with other coach components shall also be considered.
5. Standard envelope size of door should not be disturbed.
6. Fire safety measures with safe evacuation during fire accidents shall be considered during redesigning work.
7. Corrosion resistivity with environment friendly design shall be considered during redesigning work.
8. Aesthetic pleasant looks from outside as well as from inside of the coach should also be considered during redesigning of work.

9. Manufacturing feasibility with easy in Maintenance during service should also be considered during redesigning work.
10. Feasibility study should cover the compatibility aspect of the entraining/detraining arrangement with the existing doors. However, minimum changes are desirable in the structure of coach shell. If necessary, new design of door can be suggested.
11. Movement of a train from the platform shall be suitably interlocked with the entraining/detraining arrangement to avoid unsafe condition during train operation.
12. Arrangement should be suitably located and interlocked with train operation such as it comes out when door is open and can be operated by a switch having interlock with running train.
13. Design of the arrangement should be such that the travelling passenger can entrain/detrain with minimum possible difficulty.
14. Feasibility for retro-fitment in existing coaches and in manufacturing of new coaches for both ICF design as well as LHB design should be considered during redesigning work of arrangement.

3. Working conditions:-

The system supplied should work satisfactorily under the following operating conditions of IR coaches:

3.1 Coach Dynamics:

Equipment shall withstand satisfactorily the vibrations and shocks normally encountered in service as indicated below:

i)	Maximum vertical acceleration	1.0g
ii)	Maximum longitudinal acceleration	3.0g
iii)	Maximum transverse acceleration	2.0g

The vibrations are of sine wave form and the frequency vibration is between 1 Hz to 50 Hz.

The amplitude 'a' expressed in millimeters is given as a function of f, by equations

$a = 25/f$ for values of f from 1 Hz to 10 Hz.

$a = 250/f^2$ for values of f exceeding 10Hz and up to 50 Hz.

3.2 In the direction corresponding to the longitudinal movement of the vehicle, the equipment is subjected for 2 min. to 50 Hz. Vibrations of such a value that the maximum acceleration is equal to 3g.

3.3 Coach-body displacement encountered under dynamic conditions.

i)	Vertically-	±100 mm
ii)	laterally -	±55 mm
iii)	longitudinally-	±10 mm
iv)	bogie rotation about center pivot-	$\pm 4^0$

3.4 Ambient Conditions

(i)	Ambient temperature	:	-4° C to 50° C
	Altitude	:	Sea level to 2500m
	Max. temperature under Sun	:	70° C
	Relative humidity	:	40% to 95%

(ii) The rainfall is fairly heavy.

(iii) During dry weather, the atmosphere is likely to be dusty.

(iv) Temperature variations can be quite high in the same journey or short period of time.

(v) Coaches operate in coastal areas with continued exposure to salt laden air.

(vi) The coach length over buffer is approximately 22.3 meters for ICF type coaches & for LHB type coach length over coupler is approximately 24 meters.

3.5 **Coach inside conditions:**

Inside conditions of the coach may consider as under:

i) The ambient conditions may be similar as mentioned under para 3.4 above in absence of temperature control in non-AC coaches. However in summer day the value of upper range of the temperature may go up to 60^0C nearby the roof ceiling. There may be remarkable variation in temperature inside of the coach from floor to roof level.

ii) Wind flow speed nearby the window portion may be considered more than the specified speed of the non-AC coaches, as windows may remain open. The specified speed of the non-AC coaches is 110 kmph and 160 kmph in AC coaches.

iii) Air conditioned Coaches are equipped with roof mounted air conditioning system with central ducting system and side distribution branch lines. The coaches are conditioned to a nominal temperature of 23°C to 25°C, RH 55% to 60% & air flow @ 4000 cubic meter /hour.

4.0 Design requirements:

Complete entraining/detraining arrangements compatible to platform including door with fixing arrangement, footsteps and door handle shall meet the technology/system on National/ International Railway standard. Documentary evidence of supply and satisfactory performance service from user shall be provided by the vendor.

5.0 If any other parameter needs to be evaluated may also be mentioned. Cost implication of the material may also be submitted.

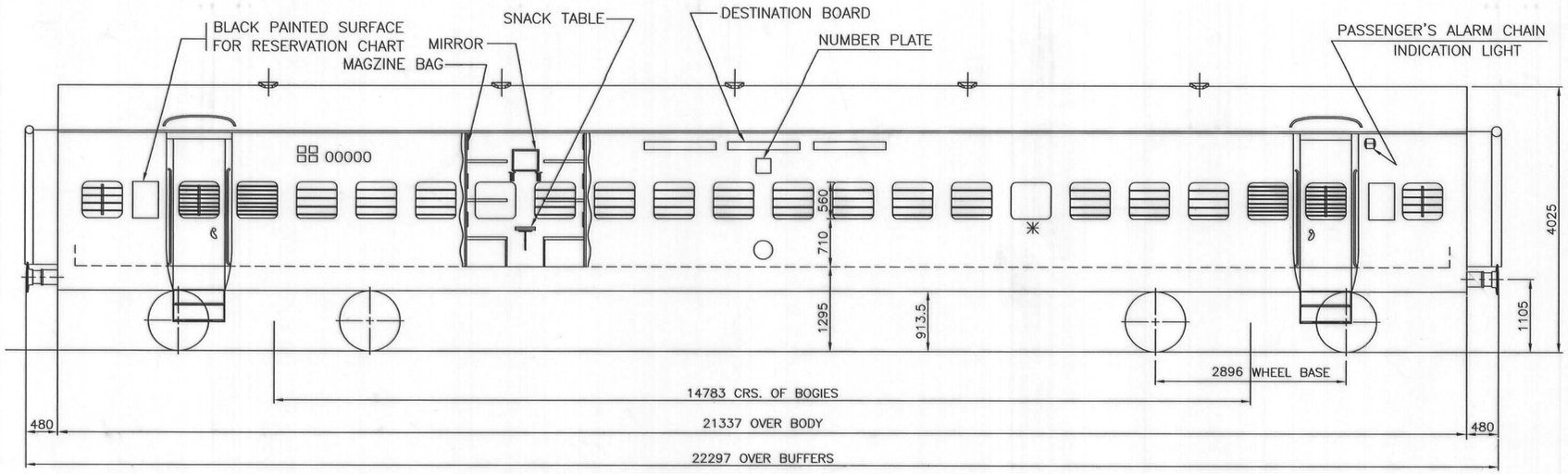

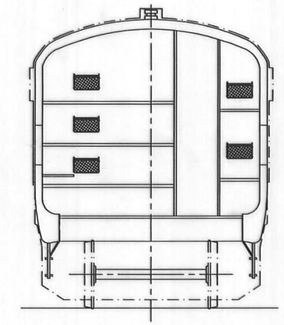

SECTION–AA

(FOR OFFICE USE ONLY)

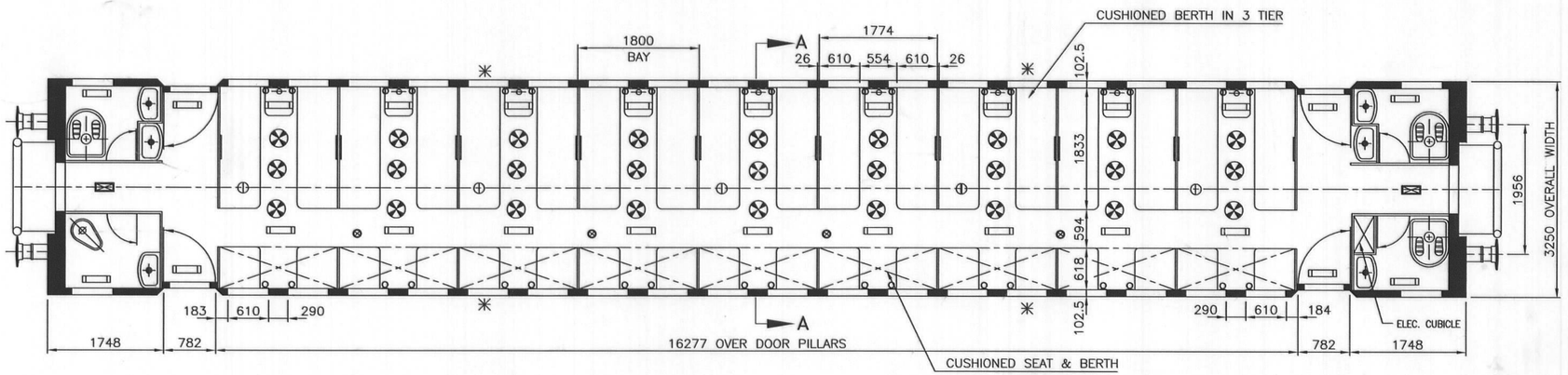

No. OF PASSENGERS TO SLEEP	72
No. OF PASSENGERS TO SEAT	72
No. OF DOORS ASIDE	2
No. OF LAVATORIES	4
No. OF PASSENGERS PER DOOR	36
No. OF PASSENGERS PER LAV.	18

NOTE:–

1. COACH PROFILE & MAX. MOVING DIMENSIONS TO SKETCH–66064.
2. EXTERIOR MARKING TO DRG. No. CSC–1728.
3. MARKED ✳ THUS INDICATES OPENABLE EMERGENCY WINDOWS.
4. COLOUR SCHEME TO RDSO DRAWING NO. CSC–1723.
5. LAPTOP/MOBILE CHARGING POINT SHOULD BE PROVIDED AS PER RDSO DRAWING NO. CG–K5091.
6. EMERGENCY LIGHT (DISASTER MANAGAMENT) SHALL BE PROVIDED AT SUITABLE LOCATION.

○	RAILWAY CREST
00000	COACH NUMBER
⊞	RAILWAY
⊗	FAN
▭	FLUORESCENT LIGHT
⊠	GANGWAY LIGHT
⦶	VENTILATOR
⊸	ALARM PULL
⊗	BLUE NIGHT LIGHT

APPROVED VIDE RAILWAY BOARD'S LETTER No. 93/M(C)/137/MISC.
DATED 16–12–93 [R.D.S.O. FILE REF. MC/CB/SC/BG, SL. NO. 1799]

ALT.	AUTHORITY	DESCRIPTION	DATE
②	STD/127/K7	DRG. REVISED AND REDRWAN	09/K7
①	STD/07/K1	FLOURECENT LIGHTS PROVIDED IN PLACE OF INCENDESCENT LAMP.	03/K1

REFERENCE	SUPERSEDED BY		INDIAN RAILWAY STANDARDS
	SUPERSEDES		ICF/RCF COACHES
	SCALE	P	
	1:50	C	LAYOUT OF 3–TIER SLEEPER COACH
		D	
		J.S.	STD/07/K1
CDIC No. K742	B.G.	R.D.S.O. [CG]	CSC–1705

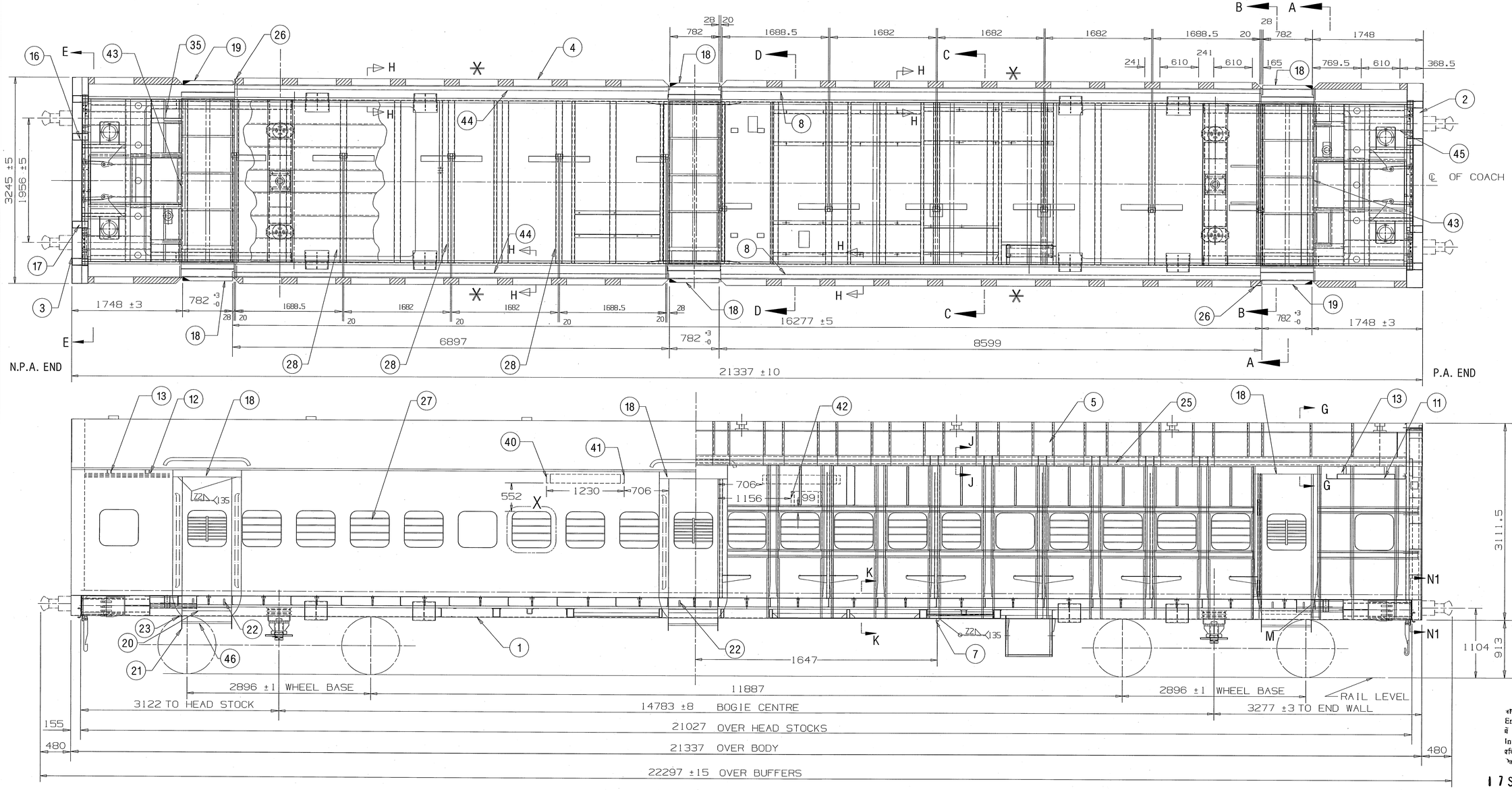

NOTE:

1. THE WINDOWS SHOWN THUS ✳ NOT TO BE PROVIDED WITH WINDOW BARS.
2. ITEMS 44 & 8 MAY BE CUT/MANUFACTURE INTO SMALLER LENGTHS.
3. THE LEVEL OF ITEMS 44 & 8 SHALL BE IN PLANE WITH CROSS BEARER TOP LEVEL. IF NEEDED SUITABLE PACKING PIECE BELOW ANGLE MAY BE PROVIDED.

(FOR OFFICE USE ONLY)

WELD LENGTH	ITEM	DESCRIPTION & DIMENSIONS	QPASSLY	DETAIL DRG	MATL. & SPEC.	REMARKS
NIL M	GROUP	BODY SHELL ASSEMBLY	SUPERSEDES:		NIL	
WEIGHT	FILE	\\Nas\shell\vjay\sg10209s1.prt(2D)				
11447. KG		BODY SHELL ASSEMBLY FOR GS/AB COACH WITH RAISED X-BEARERS, BMBC,SS INLAY WITH CUSHIONED SEATS (TO LAYOUT NO. SG90013)	SCALE	SSE/REC	17/09/2007	
S.AREA			1:30	CHD	RJSH	
NIL M²				DRN	VJAY	
LENGTH/DIA		RAIL COACH FACTORY, KAPURTHALA	REF.DRG.No.	NIL		
21.337 M						
WIDTH/THICK.		INDIAN RAILWAYS STANDARD	PL NO.	NIL		
3.245 M			DRG.NO.	SG10209		
HEIGHT 4.250 M		ADE/SME 13.9.07 DY.CME 13.9.07 NR CDE	ALT.	NIL	SIZE A	SHEET 1/2

ANY MANUAL ALTERATION SHALL AUTOMATICALLY RENDER THIS DRAWING INVALID.

FOR UNTOLERANCED DIMENSIONS REFER MDG0008

DETAIL DRGS STARTING WITH "LI" ARE INTERNAL REFERENCE LISTS ONLY AND ARE NOT FOR ISSUE.

DATE OF FIRST ISSUE	29/08/2007	CGM BY	17/09/07

दर्ज किया गया
Entered
में
Into
रजिस्टर
Date Bas.
17 SEP 2007

ALT.NO	ALT.DATE	ZONE	ALTERATIONS	AUTHORITY
NIL	NIL	NIL	NIL	NIL

(FOR OFFICE USE ONLY)

दाखिला
Entered
में
Into
मविदित्ता की
Date Base

17 SEP 2007

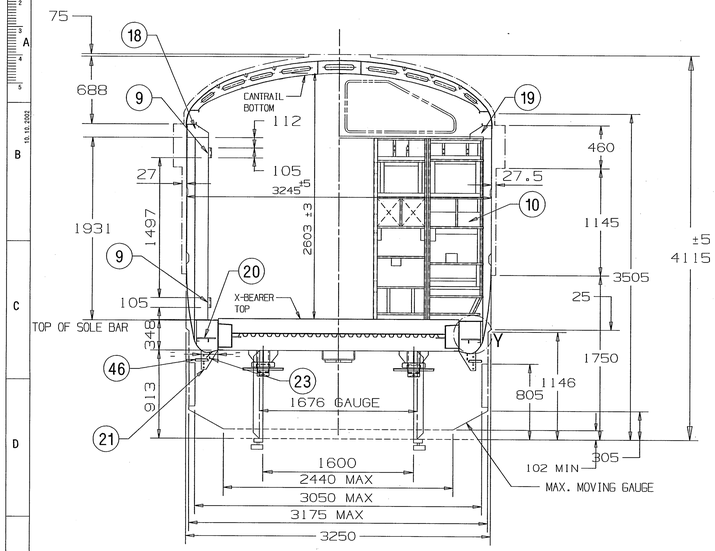

SECTION-AA

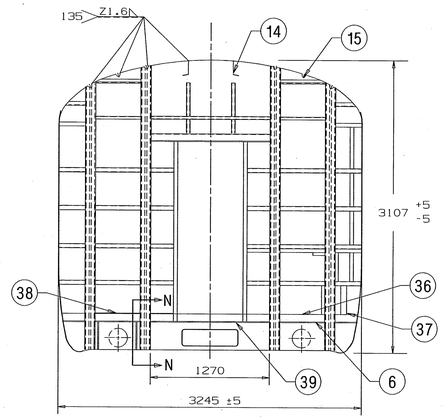

SECTION -EE

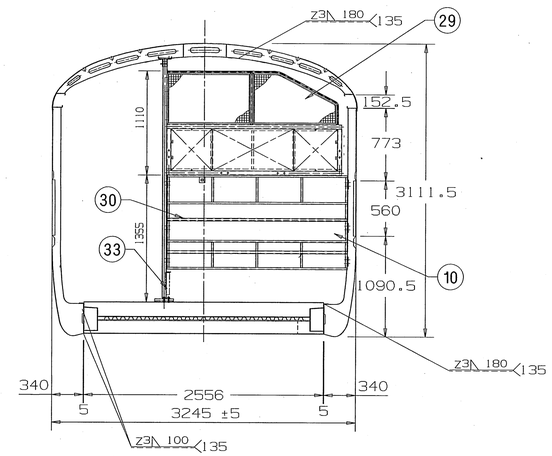

SECTION -DD

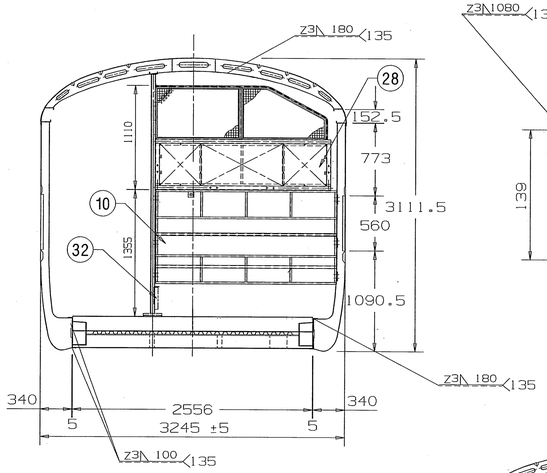

SECTION -CC

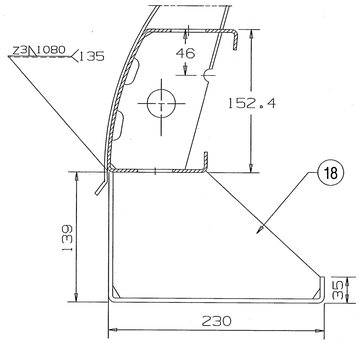

SECTION-GG

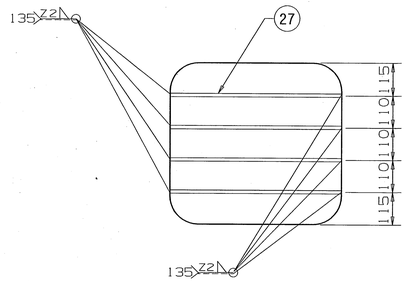

DETAIL AT X

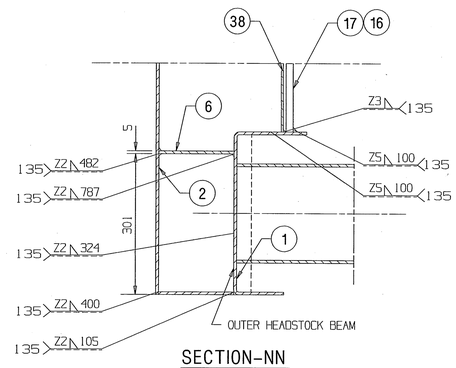

SECTION-NN

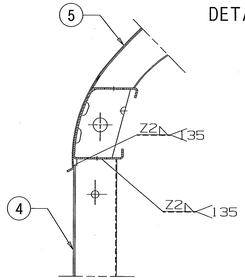

SECTION-JJ

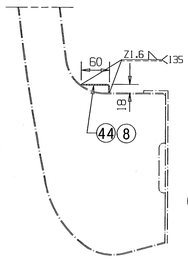

SECTION-HH

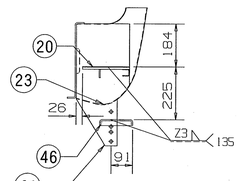

DETAIL AT Y

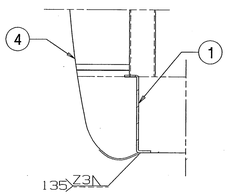

SECTION-N1N1

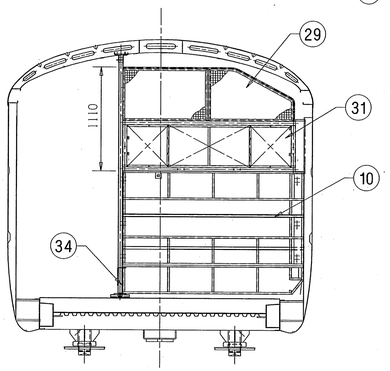

SECTION -BB

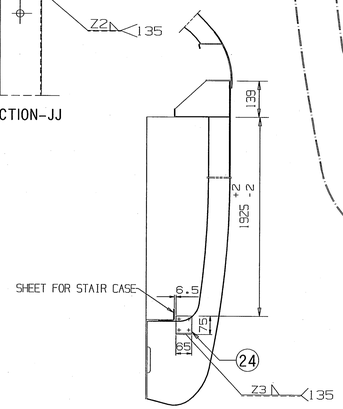

DETAIL AT M

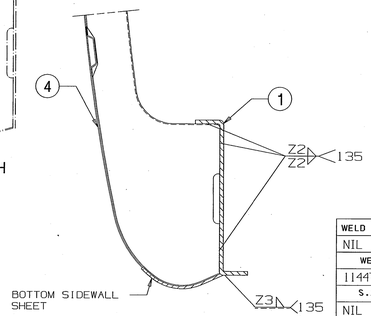

SECTION-KK

46	FOOT STEP	6	AE10766	NIL	NIL
45	FIXING ARRGT. FOR SS INLAY	1	SG10203	NIL	NIL
44	ANGLE 18X60X2 L=6840.00	2	LIANG01	IRS:M-41-97	ITEM-19
43	PROVISION OF SQ.TUBES ON WTCC	1	CC10857	NIL	NIL
42	BKT ARRGT. FOR NUMBER PLATE	2	CC26121	NIL	NIL
41	GUIDE R.H. FOR DESTINATION BOARD	6	CC26119	NIL	NIL
40	GUIDE L.H. FOR DESTINATION BOARD	6	CC26120	NIL	NIL
39	FRONT COVER 3.15X152X1270	2	NIL	IRS:M-41-97	NIL
38	STIFFENER ON HEADSTOCK	2	CC10529	NIL	NIL
37	STIFFENER ON HEADSTOCK	4	CC10528	NIL	NIL
36	STIFFENER ON HEADSTOCK	2	CC10527	NIL	NIL
35	SUPPORT FOR FLOORING	1	CC10818	NIL	NIL
34	CHAIR PILLAR NEAR END ENTERANCE	2	SG10200	NIL	NIL
33	CHAIR PILLAR NEAR MIDDLE ENTERANCE	2	SG10199	NIL	NIL
32	CHAIR PILLAR COMPLETE IN COMPARTMENT	7	SG10198	NIL	NIL
31	FRAME FOR PARTITION NEAR END ENTERANCE	2	CC10573	NIL	NIL
30	FRAME FOR PARTITION NEAR MIDDLE ENTERANCE	2	CC10567	NIL	NIL
29	PARTITION FRAME WITH EXPANDED METAL ABOVE LIGHT LUGGAGE RACK	11	SG10140	NIL	NIL
28	FRAME FOR PARTITION IN COMPARTMENT	7	T-1-0-719	NIL	COL-IV ALT.9
27	WINDOW BAR	128	CC14136	NIL	NIL
26	BRACKET FOR PAD LOCK	2	CC10870	NIL	NIL
25	LAYOUT OF TUBES FOR ALARM CHAIN	1	SG10138	NIL	NIL
24	BASE PLATE FOR LOWER DOOR BEARING	6	CC10866	NIL	NIL
23	STIFFENER FOR STEP SHEET	12	CC10790	NIL	NIL
22	HAND HOLD ARRANGEMENT	6	CC10515	NIL	NIL
21	STEP SHEET AT DOOR PILLAR	12	AZ10136	NIL	NIL
20	TOP FOOT STEP COMPLETE	6	CC10867	NIL	NIL
19	SUPPORT COMPLETE FOR UPPER DOOR BEARING	2	CC10859	NIL	NIL
18	SUPPORT COMPLETE FOR UPPER DOOR BEARING	4	CC10858	NIL	NIL
17	PILLAR FOR WATER TANK CEILING CONST.	2	TCN-1-0-746	NIL	COL-I ALT.6
16	PILLAR FOR WATER TANK CEILING CONST.	2	CC10434	NIL	NIL
15	CONNECTING PIECE	12	AW16150	NIL	NIL
14	CONNECTING PIECE	4	SE16160	NIL	NIL
13	SUPPORT BRACKET FOR CEILING CONST.	4	LB10270	NIL	NIL
12	FRAME FOR WATER TANK CEILING CONST.	1	CC10958	NIL	NIL
11	FRAME FOR WATER TANK CEILING CONST.	1	CC10957	NIL	NIL
10	LOCATION OF PARTITION FRAME	1	SG10208	NIL	NIL
9	SAFETY PLATE ARRGT. FOR CATCH	12	CC10865	NIL	NIL
8	ANGLE 18X60X2 L=8540.00	2	LIANG01	IRS:M-41-97	ITEM-19
7	BRACKET FOR RELEASE ROD	2	CC35373	NIL	NIL
6	FRONT COVER ON HEAD STOCK	4	CC10791	NIL	NIL
5	ROOF ASSEMBLY	1	SG16100	NIL	NIL
4	LOCATION OF SIDE WALLS	1	SG14152	NIL	NIL
3	END CONSTRUCTION NPA END	1	SG15114	NIL	NIL
2	END CONSTRUCTION PA END	1	SG15113	NIL	NIL
1	UNDER FRAME ARRANGEMENT	1	SG11114	NIL	NIL

WELD LENGTH	ITEM	DESCRIPTION & DIMENSIONS	QPASSLY	DETAIL DRG	MATL. & SPEC.	REMARKS
NIL M	GROUP	BODY SHELL ASSEMBLY	SUPERSEDES:		NIL	
WEIGHT	FILE	\\Nas\shell\vjay\sg10209s2.prt(2D)				
11447. KG		BODY SHELL ASSEMBLY FOR GS/AB COACH WITH RAISED X-BEARERS, BMBC,SS INLAY WITH CUSHIONED SEATS (TO LAYOUT NO. SG90013)				
S.AREA NIL M2		RAIL COACH FACTORY, KAPURTHALA				
LENGTH/DIA 21.337 M						
WIDTH/THICK. 3.245 M		INDIAN RAILWAYS STANDARD				
HEIGHT 4.250 M						

SCALE 1:30	SSE/REC	17/09/2007	
CHD	RJSH	17.9.07	
DRN	VJAY		
REF.DRG.No. NIL			
PL NO.	NIL		
DRG.NO.	SG10209		
ALT.	NIL	SIZE A1	SHEET 2/2

ADE/SME — DY.CME — NR — CDE

ANY MANUAL ALTERATION SHALL AUTOMATICALLY RENDER THIS DRAWING INVALID.

FOR UNTOLERANCED DIMENSIONS REFER MDG0008

DETAIL DRGS STARTING WITH "LI" ARE INTERNAL REFERENCE LISTS ONLY AND ARE NOT FOR ISSUE.

DATE OF FIRST ISSUE 29/08/2007 — CGM BY

ICF/SK-5-1-026

DESCRIPTION OF JIG OR TOOL	JIG OR TOOL No.	▽ ROUGH MACHINED	(31) ROUGH CLEANING	ALTERATIONS
		▽▽ FINISH MACHINED		
		▽▽▽ FINE FINISH MACHINED		

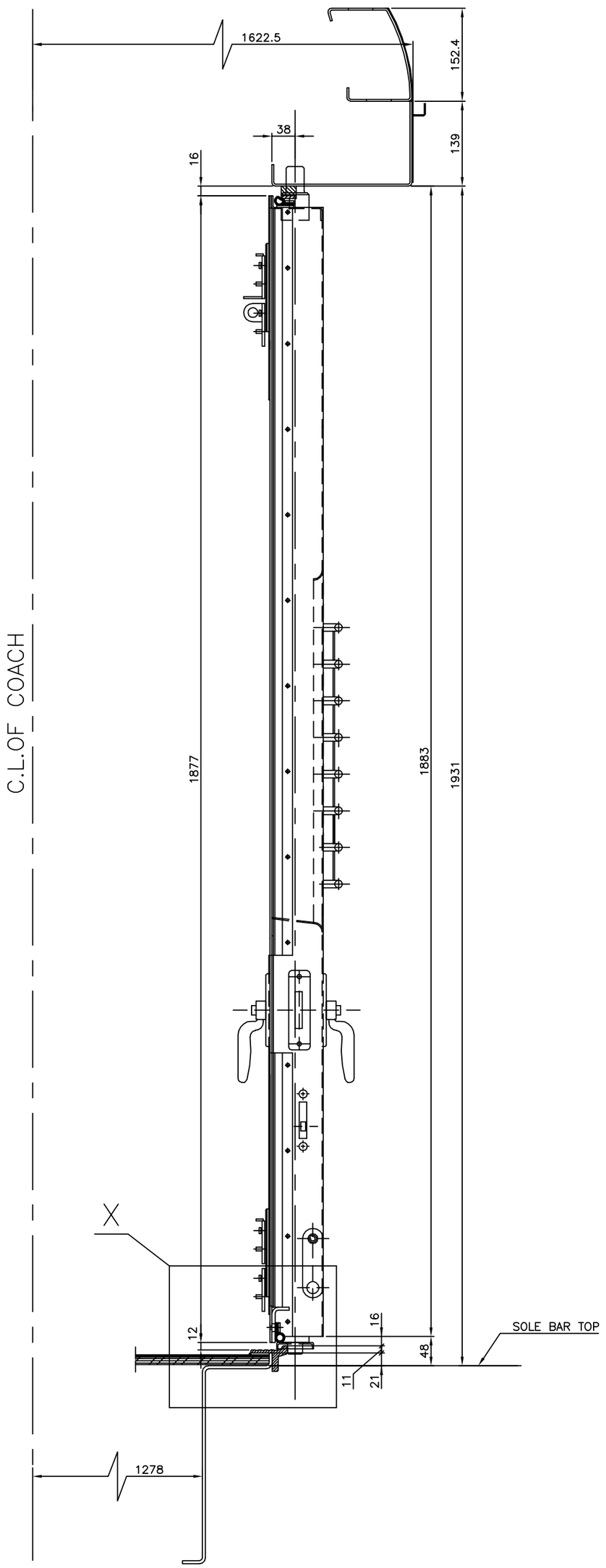

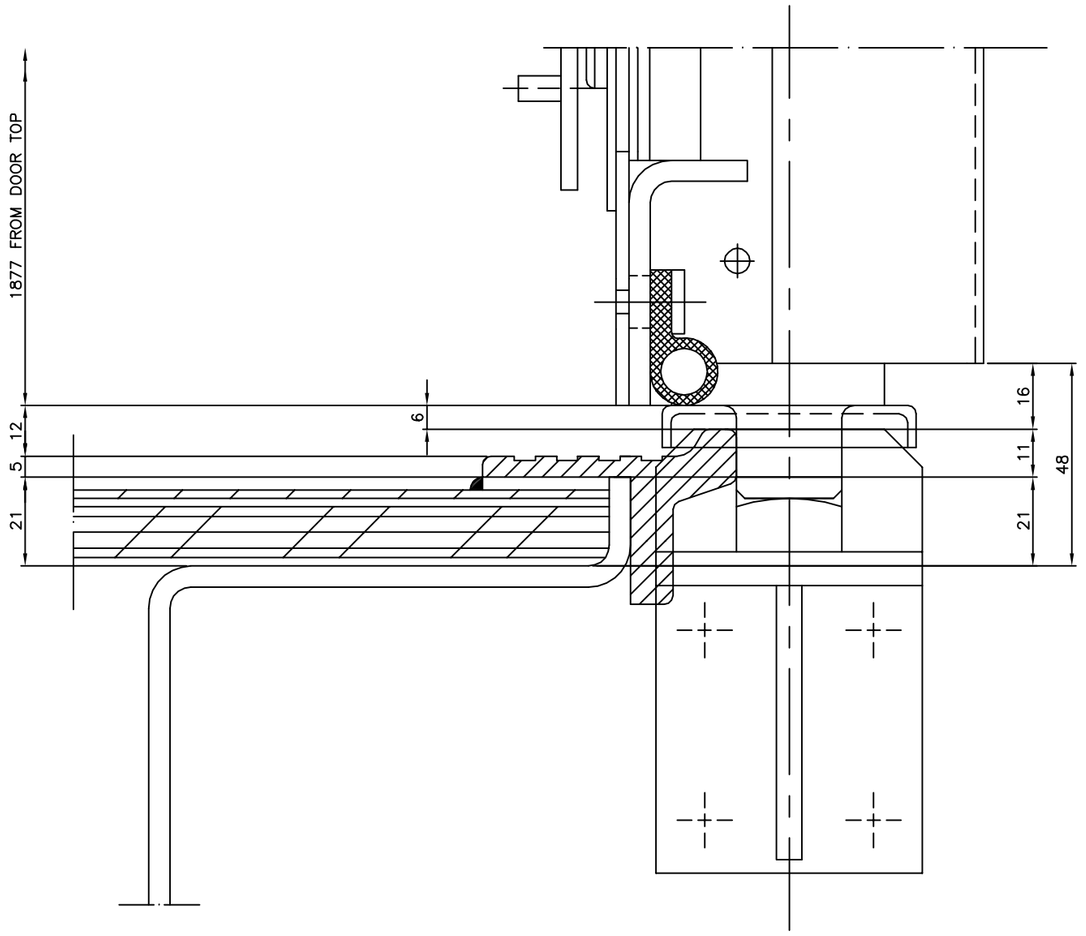

DETAIL AT-X FOR NON-A.C. COACHES

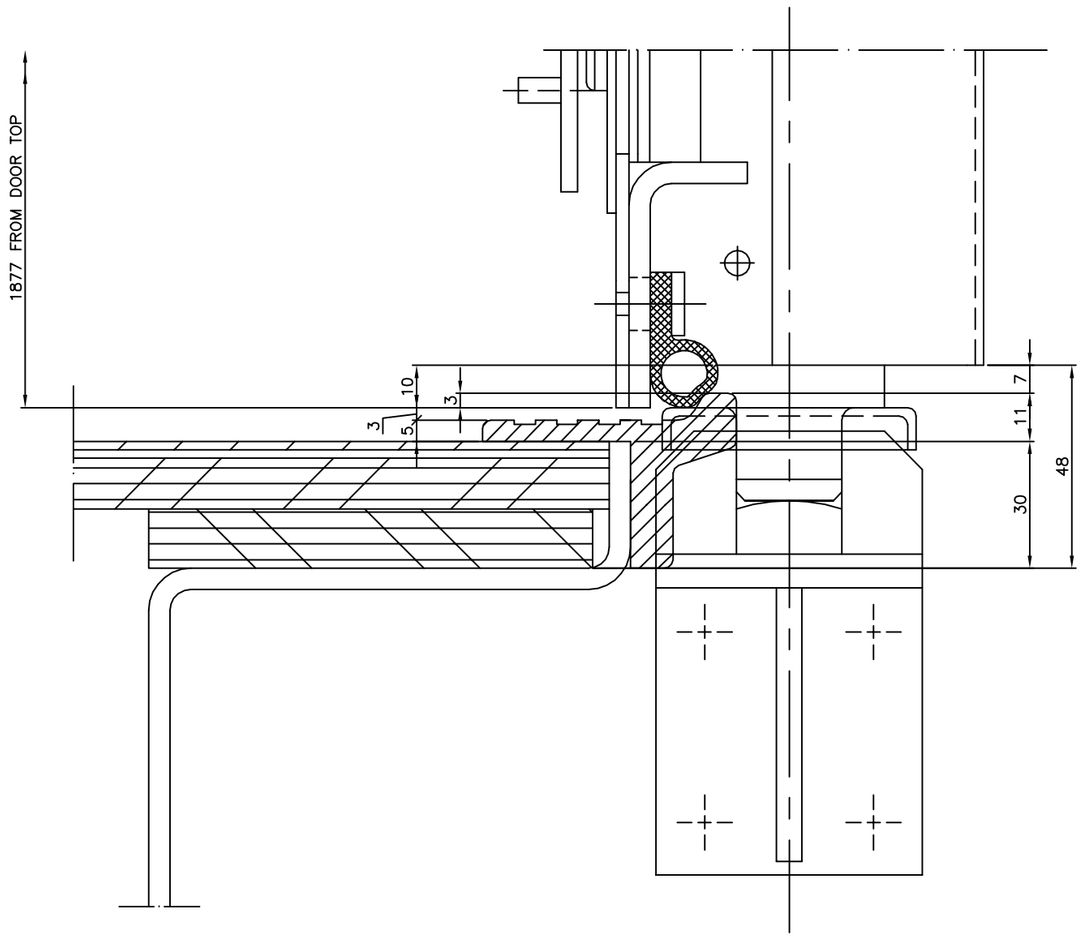

DETAIL AT-X FOR A.C. COACHES

NO.OFF						DESCRIPTION & DIMENSIONS	ITEM	REF. DRGS.	MAT.& SPEC	REMARKS
VI	V	IV	III	II	I	GROUP : 5-1 BODY SIDE DOORS			SUPERSEDED BY:	
						BODY SIDE DOOR FIXING ARRGT.			SUPERSEDES:	
									SCALE 1:5 1:1	SSE/D
										CHD
										CAD
										DRN H.Irshath Ahamed
									ALT	
						FILE NAME : C:\MD-CAD\077\5-1\026---00.DWG			INTEGRAL COACH FACTORY CHENNAI-38.	
						DATA CODE NO 077 INDIAN RAILWAY STANDARDS		SHEET 1 OF 1 SHEET	ICK/SK-5-1-026	

ASSEMBLY DRAWINGS		
DATE	DY.CME/D	SME/DSD

FORM IR A1 840 X 600

ICF/STD-5-1-002

▽ ROUGH MACHINED	(01) ROUGH CLEANING	ALTERATIONS
▽▽ FINISH MACHINED		
▽▽▽ FINE FINISH MACHINED		

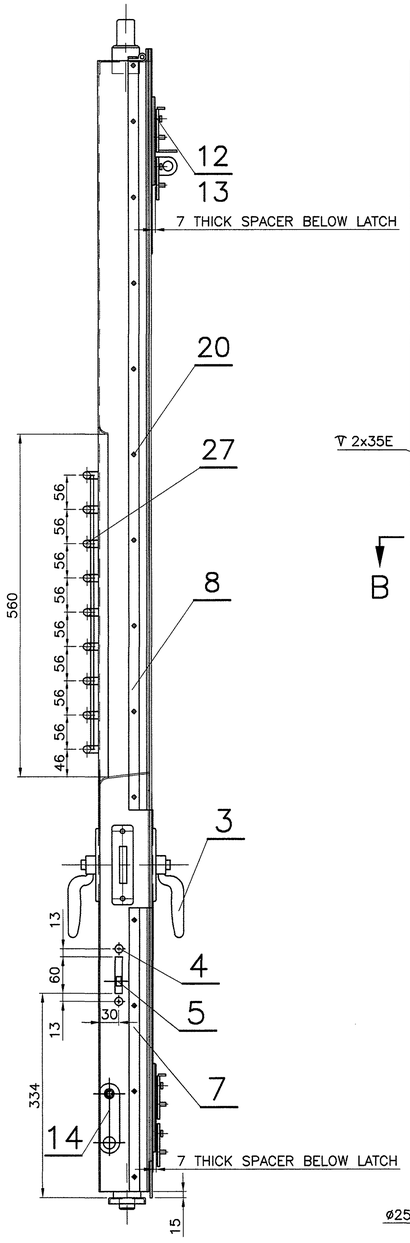

VIEW FROM OUTSIDE

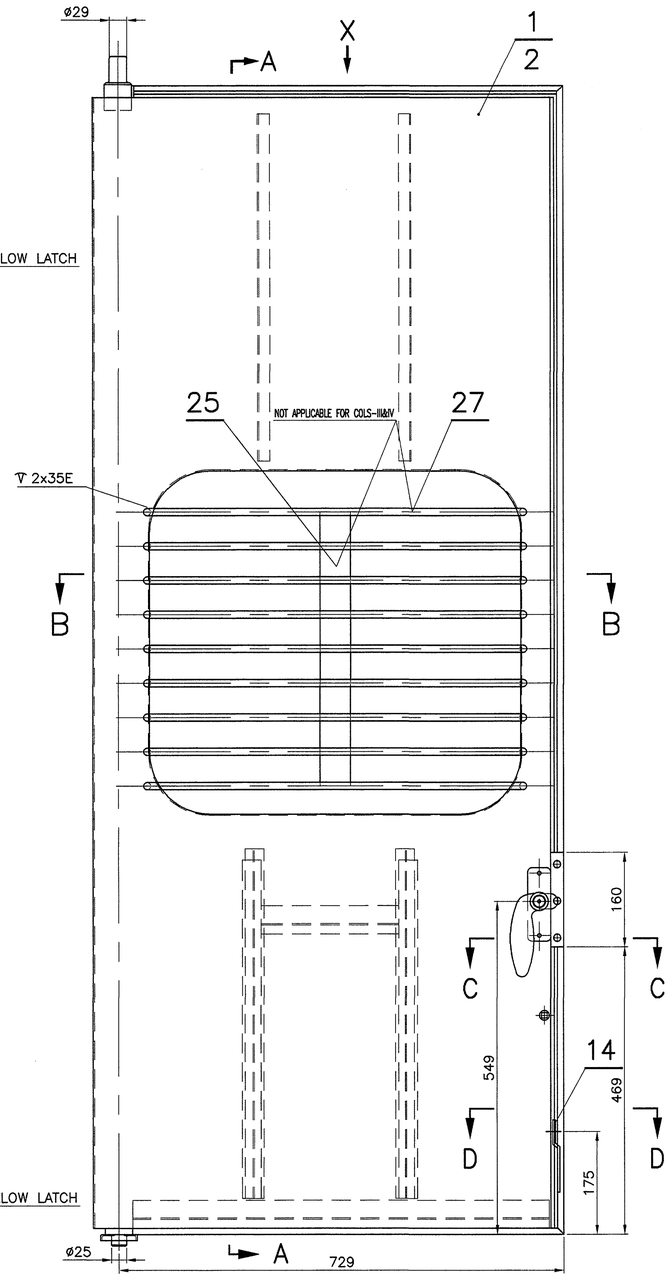

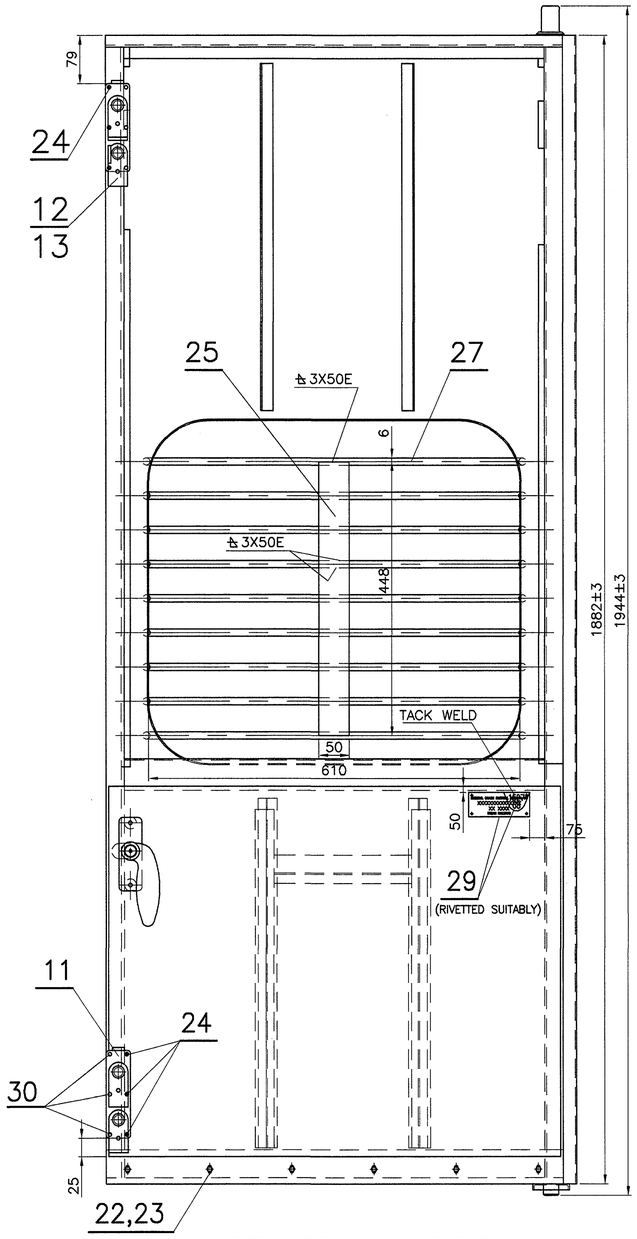

VIEW FROM INSIDE

COL-I&III R.H AS DRAWN

COL-II&IV L.H OPPOSITE

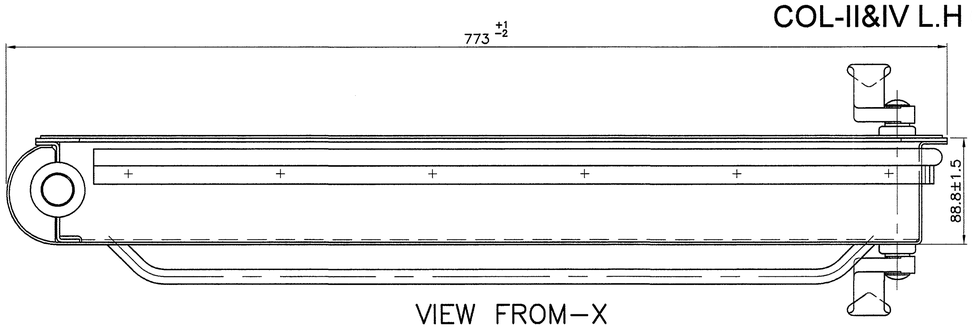

VIEW FROM–X

						NO. OFF			DESCRIPTION & DIMENSIONS	ITEM	REF. DRG	MATL. SPECN	WEIGHT/UNIT	REMARKS
						IV	III	II	I	GROUP			SUPERSEDED BY	
				DMU/DTC4 9-0-902		PER ASSY	PER ASSY	PER ASSY	PER ASSY	बाहरी दरवाजा संपूर्ण			SUPERSEDES: ICF/STD-5-1-002 ALT p/-	
				DMU/TC4 9-0-902						OUTER DOOR ASSY			SCALE 1:5, 1:2.5, 1:1	SSE/D
				MEMU/TC2-9-0-902										CHD
				DMU/DPC5 9-0-902										ALT: ल.सजि कुमार
				MEMU/DMC3-9-0-902										DRN: ल.सजि कुमार
				ASSEMBLY DRAWINGS		LH DOOR	RH DOOR	LH DOOR	RH DOOR	CAD FILE : \\MD-CAD\140\5-1\140 5-1 0022SQ00.DWG			ALT: l m n p q	
			21-07-2008							DATA CODE NO 140	INDIAN RAILWAY STANDARDS	SHEET 1 OF 2	INTEGRAL COACH FACTORY CHENNAI-38.	
	ALT	DATE OF LATEST ALTN	DATE OF FIRST ISSUE		AME/SME								ICF/STD-5-1-002	

FORM IR A1 840 X 600

ICF/STD-5-1-002

(m)	11/2006	COLS–III & IV ADDED. Sd/– SSE/D Sd/– SME/DSD
(l)	08/2005	NOTE–13 & 14 ADDED. Sd/– SSE/D Sd/– SME/DSD
(k)	03/2004	NO.OF WINDOW BARS ALTD FROM 8 TO 9. MATL SPEC UPDATED.LENGTH OF ITEM–25 ALTD FROM 435 TO 448. Sd/– SSE/D Sd/– SME/DSD
(j)	11/2002	ITEM–21 DELETED AND ITEM–30 ADDED. NOTE–3 DELETED. Sd/– SSE/D Sd/– SME/DSD
(h)	01/2001	REF.DRG. FOR ITEM–11 ALTD FROM T–5–1–648 TO ICF/STD 5–1–012 COL–III. DRG REDRAWN AND SHEET–2 ADDED.ASSY DRG NOS UPDATED. Sd/– SSE/D Sd/– SME/DSD
(g)	12/2000	REF.DRG. FOR ITEMS–12&13 ALTD FROM T–5–1–677 COL–I&II TO ICF/STD 5–1–012 COL–I&II RESPLY. 12–12–2000 Sd/– SSE/D SME/DSD
(f)	08/2000	ITEM–29 AND NOTE–12 ADDED. 12–08–2000 Sd/– SSE/D SME/DSD

▽ ROUGH MACHINED
▽▽ FINISH MACHINED
▽▽▽ FINE FINISH MACHINED

(01) ROUGH CLEANING

(n)	02/2007	NOTE–10 DELETED. Sd.. SSE/D Sd.. SME/DSD
(p)	09/2007	NOTE–9&11 DELETED. NOTE–15 ADDED. 21–09–2007 Sd/– SSE/D SME/DSD
(q)	10/2008	NOTE–12 REVISED SSE/D SME/DSD

ALTERATIONS

(a)	12/97	LOCATION OF WINDOW OPENING CORRECTED AS PER DETAILS.QTY REQD FOR COCHES ADDED IN TABULAR FORM. 22/12/97 SD/– Sd/– SME/DSS
(b)	12/98	ITEM–26 DELETED.QTY FOR ITEM–27 IN COLS–I TO IV ALTD FROM 6 TO 8.FOR ITEM –25,REF.DRG WITHDRAWN AND R.M. SIZE ADDED. REF. DRG. FOR ITEM–27 ALTD.FROM T–1–4–717 ITEM–1 TO ICF/STD–1–0–012 ITEM–19. NOTE–4 REVISED.NOTE–11 ADDED.QTY FOR DHMU/DPC, SCN5&WCB4 ADDED. 11/12/98 Sd/– SD/– SME/DSS
(c)	08/99	DOOR OUTER OVERALL HEIGHT ALTD FROM 1187 TO 1882 AND LOCATION OF ITEM–3 REVISED.NOTE–6 REVISED. 14–8–99 Sd/– SSE/D SME/DSS
(d)	02/2000	ITEM–28,NOTE–4 AND COLS–III&IV DELETED. NOTES 1&2 REVISED. 18–2–2000 Sd/– SSE/D SME/DSD
(e)	03/2000	LOCATING DIMENSION–175 ADDED FOR ITEM–14. 08–03–2000 Sd/– SSE/D SME/DSD

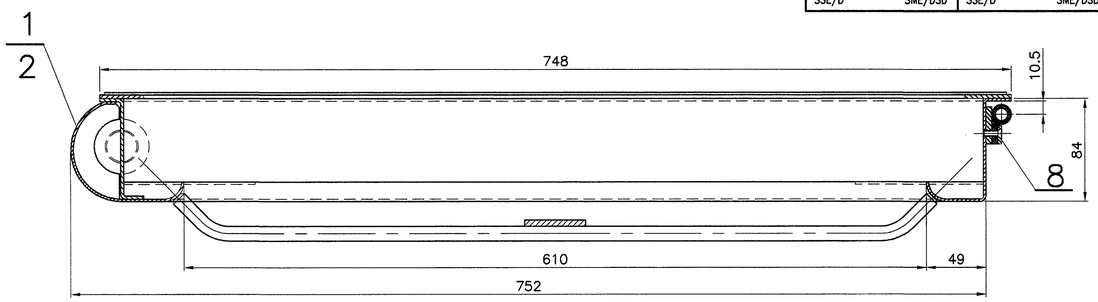

SECTION– BB

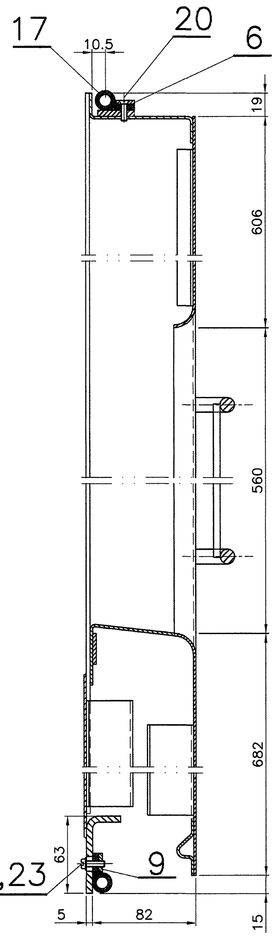

SECTION–AA

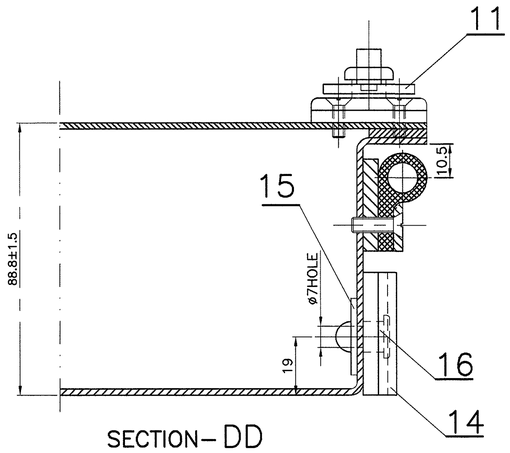

SECTION– DD

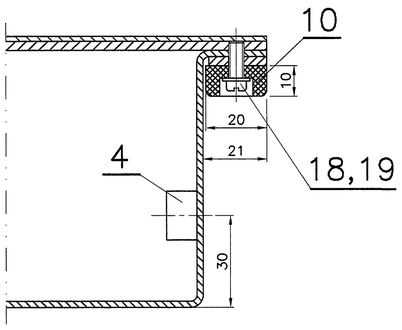

SECTION– CC

NOTE

1. COL–I R.H.AS DRAWN
2. COL–II. L.H.OPPOSITE.
3. ~~COL–I&II.APPLICABLE FOR CONVENTIONAL COACHES.~~
4. ~~———————————————————~~
5. ITEMS–12,13 & SIX NO.OF ITEM–24 TO BE SUPPLIED LOOSE.
6. OPEN TOLERANCE TO DRG.NO. ICF/STD–9–0–001 SHALL GENERALLY BE FOLLOWED WHEREVER TOLERANCE IS NOT MENTIONED FOR DIMENSIONS.
7. COL–I OF THIS DRG SUPEREDES COLS–II&IV OF DRG.NO.T–5–1–672 ALT(x).
8. COL–II OF THIS DRG SUPEREDES COLS–II&IV OF DRG.NO.T–5–1–673 ALT(v).
9. ~~DOOR ASSY SHOULD BE PAINTED WITH ONE COAT OF ROZ PRIMER TO SPEC: IS:2074 92 AFTER CLEANING.THICKNESS OF PAINT FILM SHOULD NOT BE LESS THAN 20 MICRONS.~~
10. ~~IS:513–1986 GRADE 'D' CAN BE USED AS ALTERNATIVE MATERIAL FOR DOOR FABRICATION.~~
11. ~~THE INNER PORTIONS OF THE OUTER DOOR SHEET,INNER DOOR SHEET BOTTOM PART AND THE DOOR POST TO BE GIVEN THREE COATS OF BITUMINUS EMULSION TO SPEC:IRS P–30 OVER THE COATING OF ROZ PRIMER.THE TOTAL DRY FILM THICKNESS(DFT) SHOULD NOT BE LESS THAN 250 MICRONS.~~
12. ✪ ITEM–29 SHOULD BE RIVETED SUITABLY TO INNER DOOR SHEET, WHEN DOORS ARE PROCURED FROM TRADE. FOR DOORS MANUFACTURED AT ICF ITEM–29 TO BE MADE FROM CARLINE OFF CUTS AND 4 DIGIT DOOR UNIQUE NUMBER AND YEAR OF MANUFACTURE TO BE PUNCHED FOR EASY IDENTIFICATION OF DOOR IN THE SHOP FLOOR.(EXAMPLE:1527–08)
13. ITEMS–25&27 NOT REQUIRED FOR ANGOLA COACHES.
14. ITEM–3 TO BE SUPPLIED LOOSE AND ASSEMBLED BEFORE DESPATCH OF SHELL.
15. DOOR ASSY SHOULD BE PAINTED WITH HIGH PERFORMANCE ANTICORROSION EPOXY COATING (TWO PACK) TO RDSO SPEC NO.M&C/PCN/123/2006 TO A DFT OF MINIMUM 100 MICRONS.(INCLUDING THE INNER PORTIONS OF THE OUTER DOOR SHEET,INNER DOOR SHEET BOTTOM PART AND THE DOOR POST)

NO. OFF IV	NO. OFF III	NO. OFF II	NO. OFF I	DESCRIPTION & DIMENSIONS	ITEM	REF. DRG	MATL. SPECN	WEIGHT/UNIT	REMARKS
3	3	3	3	CSK HD.RIVET ø6x22	30	IS:2907–64 TAB–3 FIG.3	IS:740–77 19000		
1	1	1	1	SUPPLIER IDENTIFICATION BOARD	29	ICF/SK 5–1–027			ITEM–1 ✪
					28				
–	–	9	9	WINDOW BAR	27	ICF/STD 1–0–012			ITEM–19
					26				
–	–	1	1	FLAT 50x5x448	25	IS:2062–99 Fe 410 WA			KILLED QUALITY
9	9	9	9	CSK.HD.SCREW M6x20	24	IS:1365–78 4.8–TAB–1&2			NICKEL PLATED
6	6	6	6	CHEESE.HD.SCREW M5x20	23	IS:1366–82 4.8–TAB–1			NICKEL PLATED
6	6	6	6	SPRING WASHER M6	22	IS:3063–72 TAB–1,TYPE–B	IS:4072–75 GR–3		GALVD.
					21				
20	20	20	20	CSK.HD.SCREW M5x16	20	IS:1365–78 4.8–TAB–1&2			NICKEL PLATED
3	3	3	3	CHEESE.HD.SCREW M4x12	19	IS:1366–82 4.8–TAB–1			GALVD.
3	3	3	3	PLAIN WASHER 4.5	18	IS:2016–67 TAB–2,TYPE–A	IS:737–86 31000–H2		
1	1	1	1	SEALING RUBBER	17	T–5–1–661			
1	1	1	1	PIN	16	T–5–1–104			
1	1	1	1	SQUARE WASHER	15	T–5–1–108			
1	1	1	1	LOCKING PLATE	14	T–5–1–103			ITEM–1
1	–	1	–	SAFETY CATCH WITH LUG FOR PAD LOCKING OF BODY SIDE DOOR	13	ICF/STD 5–1–012			COL–II
–	1	–	1	SAFETY CATCH WITH LUG FOR PAD LOCKING OF BODY SIDE DOOR	12	ICF/STD 5–1–012			COL–I
1	1	1	1	SAFETY CATCH	11	ICF/STD 5–1–012			COL–III
1	1	1	1	DOOR STOP	10	T–5–1–517			
1	1	1	1	PACKING RAIL	9	T–5–1–644			COL–V
1	1	1	1	PACKING RAIL (SIDE TOP)	8	T–5–1–657			
1	1	1	1	PACKING RAIL (SIDE BOTTOM)	7	T–5–1–656			ITEM–1
1	1	1	1	PACKING RAIL (TOP)	6	T–5–1–646			
1	1	1	1	GUARD'S LOCKING ARRGT.	5	T–5–1–659			COL–III
2	2	2	2	SCREWING PIECE	4	T–5–1–660			
1	1	1	1	DOOR LOCK ASSY.	3	T–5–1–109			COL–VI
1	–	1	–	DOOR FRAME ARRGT. L.H.	2	T–5–1–604			COL–IV
–	1	–	1	DOOR FRAME ARRGT. R.H.	1	T–5–1–676			COL–IV

	IV	III	II	I
	PER ASSY	PER ASSY	PER ASSY	PER ASSY
	L.H DOOR	R.H DOOR	L.H DOOR	R.H DOOR
DMU/DTC4 9–0–902				
DMU/TC4 9–0–902				
MEMU/TC2–9–0–902				
DMU/DPC5 9–0–902				
MEMU/DMC3–9–0–902				
ASSEMBLY DRAWINGS				

GROUP: 5–1 BODY SIDE DOORS

बाहरी दरवाजा संपूर्ण
OUTER DOOR ASSY

CAD FILE : \\MD–CAD\140\5–1\140 5–1 0022SQ00.DWG

DATA CODE NO 140

INDIAN RAILWAY STANDARDS

SHEET 2 OF 2

SUPERSEDED BY

SUPERSEDES: ICF/STD–5–1–002 ALT p/–

SCALE	SSE/D	
1:5	CHD	
1:2.5	ALT	ल.सिंग कुमार
1:1	DRN	ल.सिंग कुमार

ALT l m n p q

INTEGRAL COACH FACTORY CHENNAI–38.

ICF/STD–5–1–002

ALT	DATE OF LATEST ALTN	DATE OF FIRST ISSUE	AME/SME
	21–01–2008		21/1/08

FORM IR A1 840 X 600

ALT.NO	ALT.DATE	ZONE	ALTERATIONS	AUTHORITY
b	26/06/2006	ALL J6	1. DIM 225 WAS 305 AND ONE FOOT STEP ADDED. ISO VIEW ADDED.	DIC NO. MD060030
c	20/07/2007	ALL	1. WEIGHT WAS 20.5KG AND ALL VIEWS UPDATED.	DIC NO. MD060030

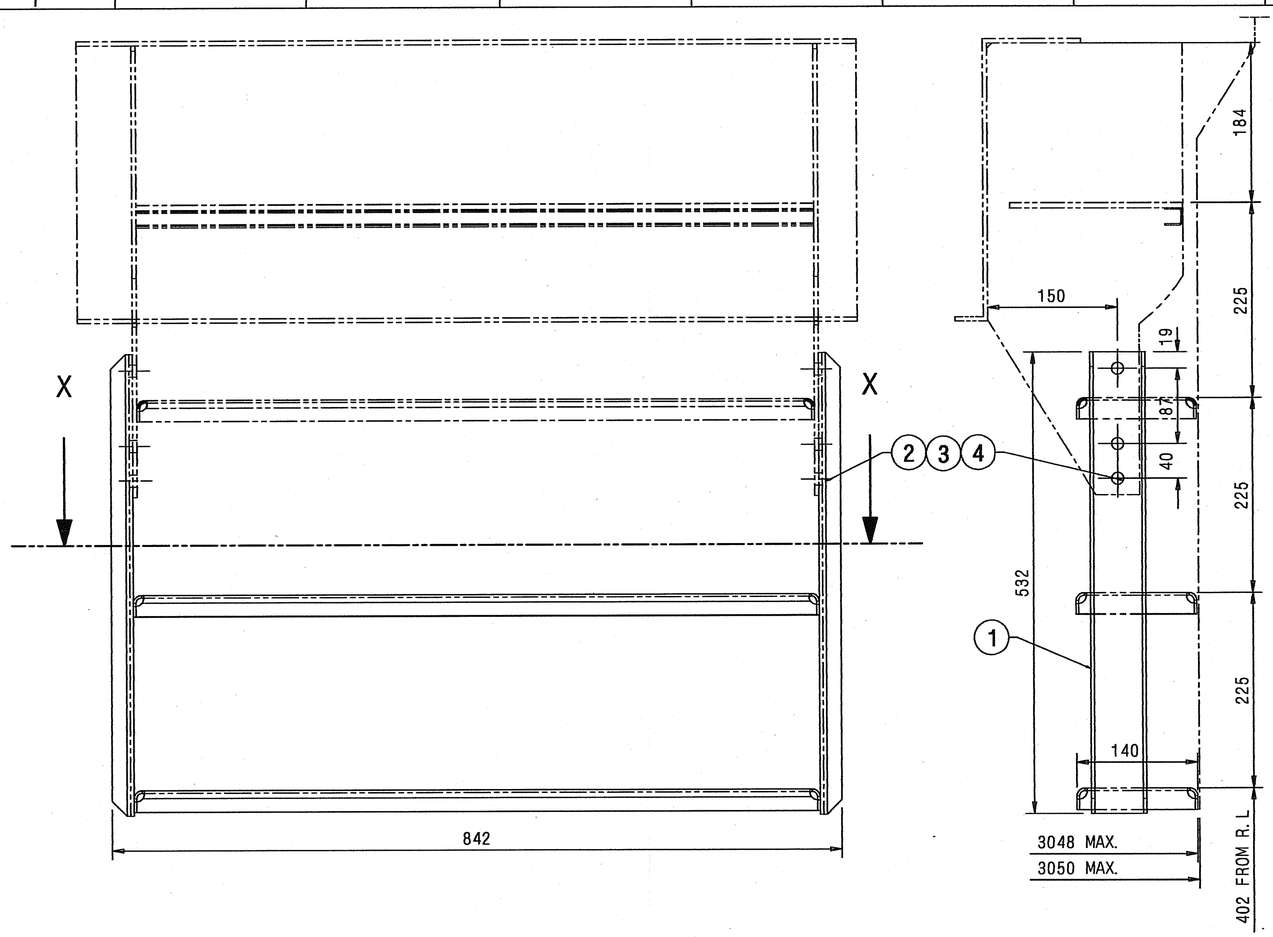

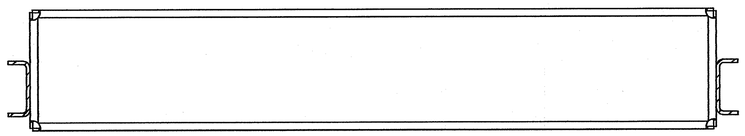

SECTION X-X

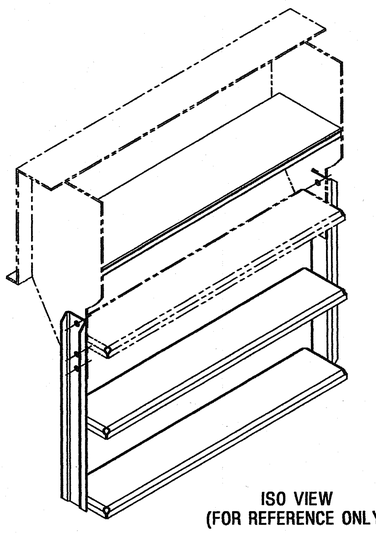

ISO VIEW
(FOR REFERENCE ONLY)

(FOR OFFICE USE ONLY)

भाकाडा
Entered
में
Into
प्रविष्टियां की
Date Base
24 JUL 2007

4	SPRING WASHER B12	6	LIHW09	IS: 3063-1994	ITEM-22 COATING TO MDTS 057
3	HEX NUT M12	6	LIHW08	IS: 1364 PT.3-92	ITEM-6 COATING TO MDTS 057
2	HEX HEAD SCREW M12X25	6	LIHW02	IS: 1364 PT.2-92 5.6,CE	ITEM-26 COATING TO MDTS 057
1	FOOT STEP COMPLETE	1	CC24110	NIL	NIL
ITEM	DESCRIPTION & DIMENSIONS	QPASSLY	DETAIL DRG	MATL. & SPEC.	REMARKS

WELD LENGTH	NIL M
WEIGHT	15.000 KG
S.AREA	NIL M^2
LENGTH / ~~DIA~~	0.842 M
~~WIDTH~~ / ~~THICK~~	NIL M
HEIGHT	NIL M

GROUP: STEPS, RAILING, LADDERS ETC.
SUPERSEDES: CC24105 ALT b
FILE: cc24105c.prt(3d)

FOOT STEP ARRANGEMENT

RAIL COACH FACTORY, KAPURTHALA

INDIAN RAILWAYS STANDARD

SCALE	1:5	SSE/REC	24/07/07
CHD	DUGL		23-7-7
DRN	TEGV		23-7-7
REF.DRG.No.	CG-K6029		
PL NO.	NIL		
DRG.NO.	CC24105		
ALT.	c	SIZE A2	SHEET 1/1

ADE/SME 23-7-07 DY.CME CDE

DETAIL DRGS STARTING WITH "LI" ARE INTERNAL REFERENCE LISTS ONLY AND ARE NOT FOR ISSUE
ANY MANUAL ALTERATION SHALL AUTOMATICALLY RENDER THIS DRAWING INVALID.
FOR UNTOLERANCED DIMENSIONS REFER MDG0008 | DATE OF FIRST ISSUE 22/05/2000 | CGM BY 23-7-7

ALT.NO	ALT.DATE	ZONE	ALTERATIONS	AUTHORITY
a	12/05/99	ALL K19 J5 E12 J4 J11	1. DRAWING ENTERED IN UG AND DRAWING PROFORMA REVISED. 2. PL NO. ADDED FOR DRAWING. 3. WELDING SYMBOL UPDATED. 4. NOTE-1 MODIFIED AND NOTE-3 TO 7 ADDED. 5. SECTION-XX ADDED IN PLACE OF DETAIL AT 'X'. 6. ISO VIEW ADDED.	DIC NO. MD990145
b	27/09/2007	ALL	1. NOTE-8 ADDED.	DIC NO. MD070050

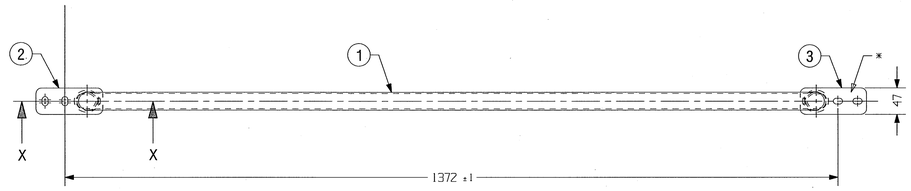

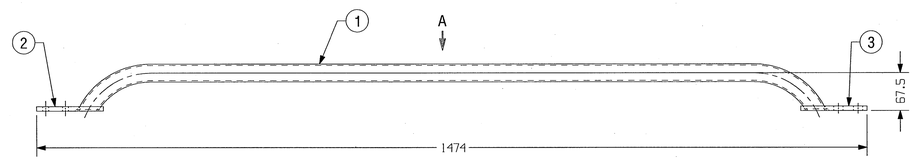

NOTE:-

1. METHOD FOR SURFACE TREATMENT SHALL BE AS PER IS:6911-92, TAB-8, NO.-4.
2. NO GAP SHALL BE SEEN BETWEEN ITEM-1 AND ITEMS-2 & 3 WHEN VIEWED FROM DIRECTION 'A'.
3. LOW HEAT INPUT STAINLESS STEEL ELECTRODE OF SIMILAR COMPOSITION TO TUBE AND BASE PLATE SHOULD BE USED FOR WELDING.
4. MANUFACTURER'S NAME AND DATE OF MANUFACTURE TO BE STAMPED AT THE LOCATION MARKED * THUS IN CHARACTER SIZE OF 5 mm.
5. SURFACE SHALL BE CLEANED PROPERLY BEFORE WELDING BY MECHANICAL AND CHEMICAL PROCESS.
6. THERE SHOULD NOT BE ANY WELDING DEFECTS.
7. ALL SHARP CORNERS SHALL BE ROUNDED OFF.
8. ALL WELDED AREAS TO BE **PICKLED & PASSIVATED BEFORE SURFACE TREATMENT.**

(FOR OFFICE USE ONLY)

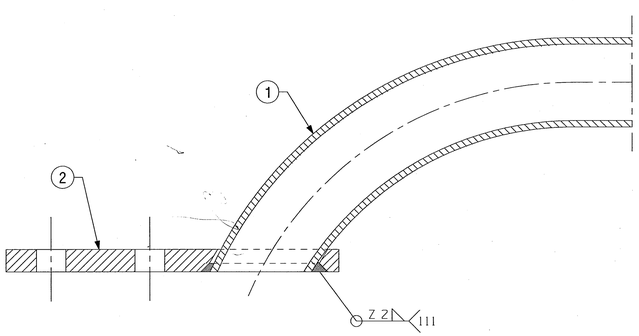

SECTION-XX

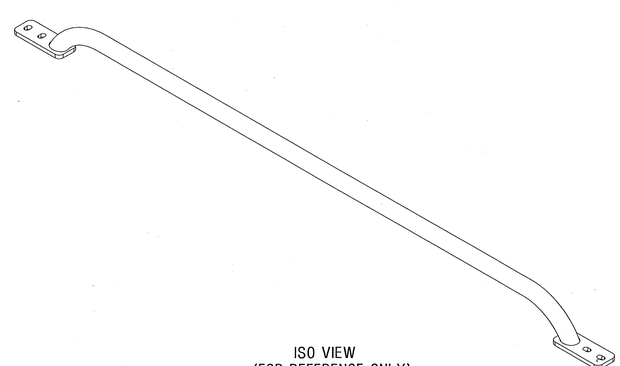

ISO VIEW
(FOR REFERENCE ONLY)

Entered
Into
Date

02 NOV 2007

ITEM	DESCRIPTION & DIMENSIONS	QPASSLY	DETAIL DRG	MATL. & SPEC.	REMARKS
3	BASE PLATE (R.H.)	1	CC26118	NIL	NIL
2	BASE PLATE (L.H.)	1	CC26117	NIL	NIL
1	TUBE	1	CC26116	NIL	NIL

WELD LENGTH	NIL M
WEIGHT	2.7639 KG
S.AREA	NIL M^2
~~LENGTH/DIA~~	NIL M
~~WIDTH/THICK.~~	NIL M
HEIGHT	NIL M

GROUP: EXTERIOR GARNITURE
SUPERSEDES: CC26115 ALT a
FILE: cc26115b.prt(3D)

ENTRANCE HAND RAIL

RAIL COACH FACTORY, KAPURTHALA

INDIAN RAILWAYS STANDARD

ADE/SME 24.10.07 DY.CME 29.10.07 CDE

SCALE	1:5
SSE/REC	02/11/07
CHD	DUGL 25.9.7
DRN	VERM 25/9/07
REF.DRG.No.	NIL
PL NO.	NIL
DRG.NO.	CC26115
ALT.	b
SIZE	A1
SHEET	1/1

ANY MANUAL ALTERATION SHALL AUTOMATICALLY RENDER THIS DRAWING INVALID.

FOR UNTOLERANCED DIMENSIONS REFER MDG0008

DETAIL DRGS STARTING WITH "LI" ARE INTERNAL REFERENCE LISTS ONLY AND ARE NOT FOR ISSUE.

DATE OF FIRST ISSUE 10/06/1992 CGM BY

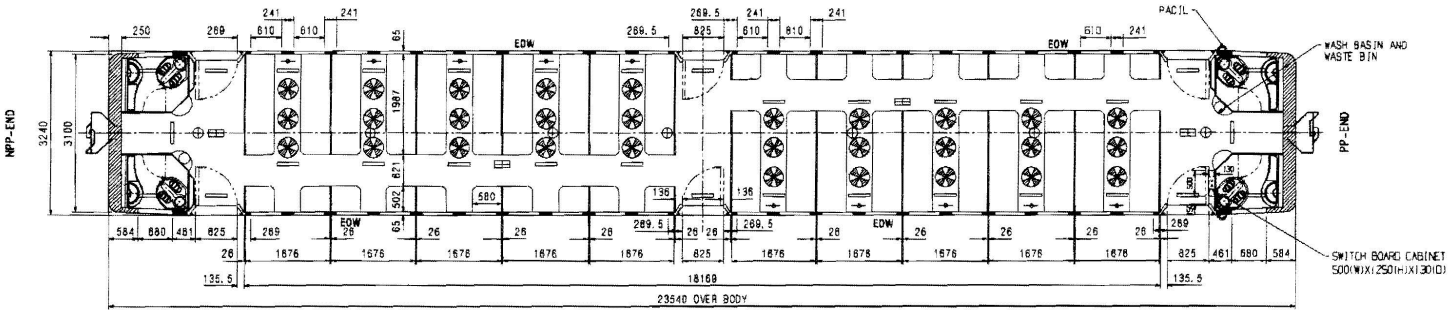

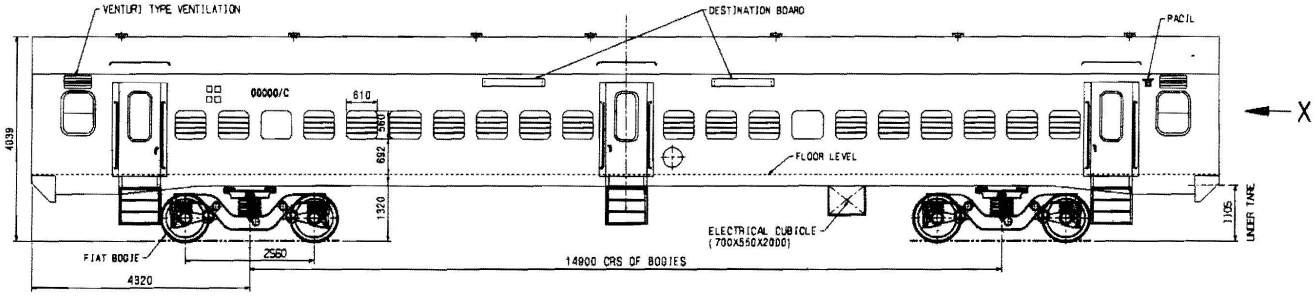

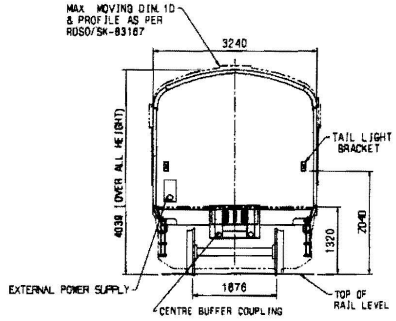

VIEW FROM 'X'

--- RAILWAY CREST
--- RAILWAY
00000/C --- COACH NUMBER
--- VENTILATOR
--- FAN FIXED TYPE (400MM SWEEP)
--- FLOURESCENT LIGHT
--- DISASTER EMERGENCY LIGHT (LHB TYPE)
--- ALARM PULL
--- PACIL
EOW --- EMERGENCY OPENABLE WINDOW

NOTE:-

1. NO. OF PASSENGERS TO SEAT -100
3. NO. OF DOOR ASIDE -03
4. NO OF LAVATORIES -04
5. NO. OF EMERGENCY OPENABLE WINDOWS -04
6. TRANSPORTATION CODE -LS1

APPROVED VIDE RAILWAY BOARD'S LETTER NO.2007/M(C)/137/16 DATED 25/04/12 (RDSO FILE MC/LHB/LAYOUT 5.NO.01)

FOR OFFICE USE ONLY

ALT.	ITEM	AUTHY.	DESCRIPTION	CKD.	DATE
1	-	STD/21/12	REVISED & REDRAWN		05/12

	SUPERSEDED BY:-		INDIAN RAILWAY STANDARDS
ASSEMBLY DRGS.	SUPERSEDES:-		NON AC (EOG) LHB VARIANT COACHES
REFERENCE :- CG-12008 ALT.-1	SCALE 1:50	P / C / D / J.S. STD/17/12	LAYOUT OF SECOND CLASS NON AC (EOG) COACH
CDIC NO. :-	B.G.	R.D.S.O. (CG)	CSC-1809

SHEET No. 107

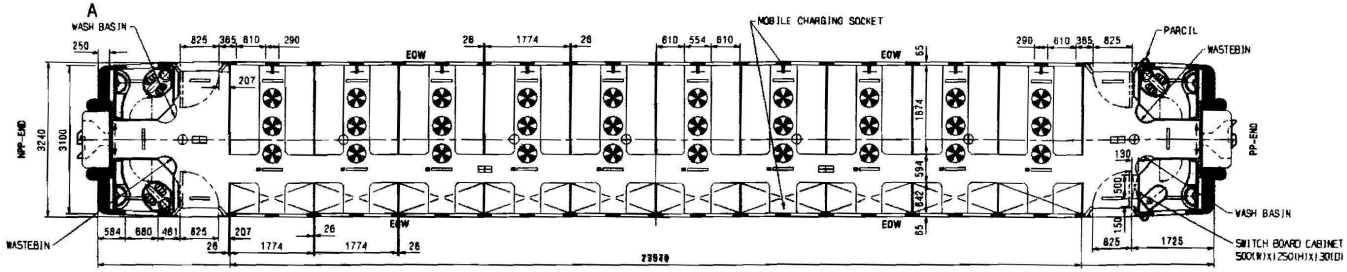

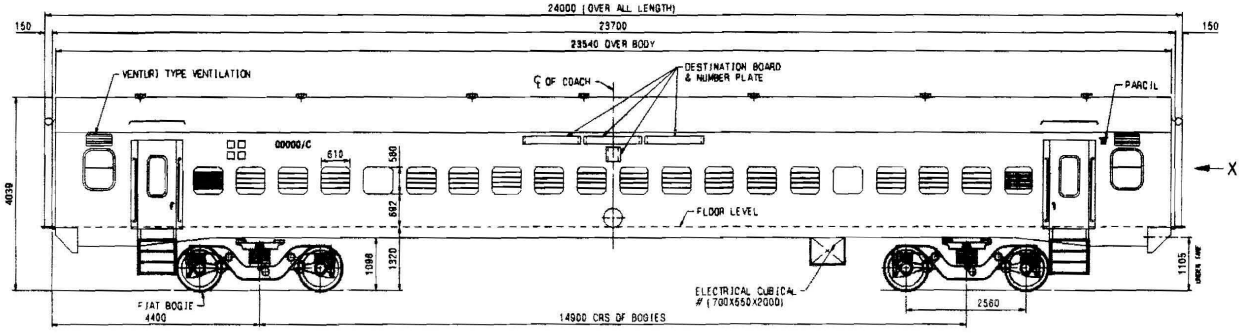

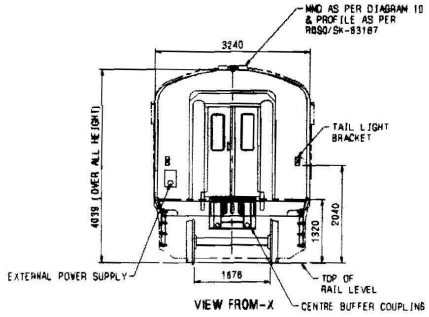

(FOR OFFICE USE ONLY)

- -- RAILWAY CREST
- --- RAILWAY
- 00000/C --- COACH NUMBER
- --- VENTILATOR
- --- FAN FIXED TYPE (400MM SWEEP)
- --- FLOURESCENT LIGHT
- --- NIGHT LIGHT
- --- DISASTER EMERGENCY LIGHT (LHB TYPE)
- --- ALARM PULL
- --- PARCIL
- EOW --- EMERGENCY OPENABLE WINDOW
- --- MOBILE CHARGING SOCKET (02 Nos IN EACH BAY)

NOTE:-

1. NO. OF PASSENGERS TO SLEEP -80
2. NO OF PASSENGERS TO SIT -80
3. NO. OF DOOR ASIDE -02
4. NO. OF LAVATORIES -04
5. NO OF EMERGENCY OPENABLE WINDOWS 04
6. WINDOW TO BE PROVIDED WITH DUST SCREEN
7. TRANSPORTATION CODE -LWSCN1

INDICATE CLEAR SPACE(LxWxH)

APPROVED VIDE RAILWAY BOARD'S LETTER NO.2007/M(C)/137/16
DATED 25/04/12 (RDSO FILE MC/LHB/LAYOUT S.NO.01)

ALT.	ITEM	AUTHY.	DESCRIPTION	CKD.	DATE
2		STD/25/12	FIRE EXTINGUISHER REMOVED.		07/12
1		STD/20/12	REVISED & REDRAWN		05/12

ASSEMBLY DRGS.
REFERENCE :- 06-12007
SUPERSEDED BY:-
SUPERSEDES:-
SCALE 1:50
P
C
D
J.S. STD/16/12
CDIC NO :-
B.G.
R.D.S.O. LCGI

INDIAN RAILWAYS STANDARDS
NON AC (EOG) LHB VARIANT COACHES
LAYOUT OF
THREE TIER SLEEPER NON AC (EOG) COACH
CSC-1808

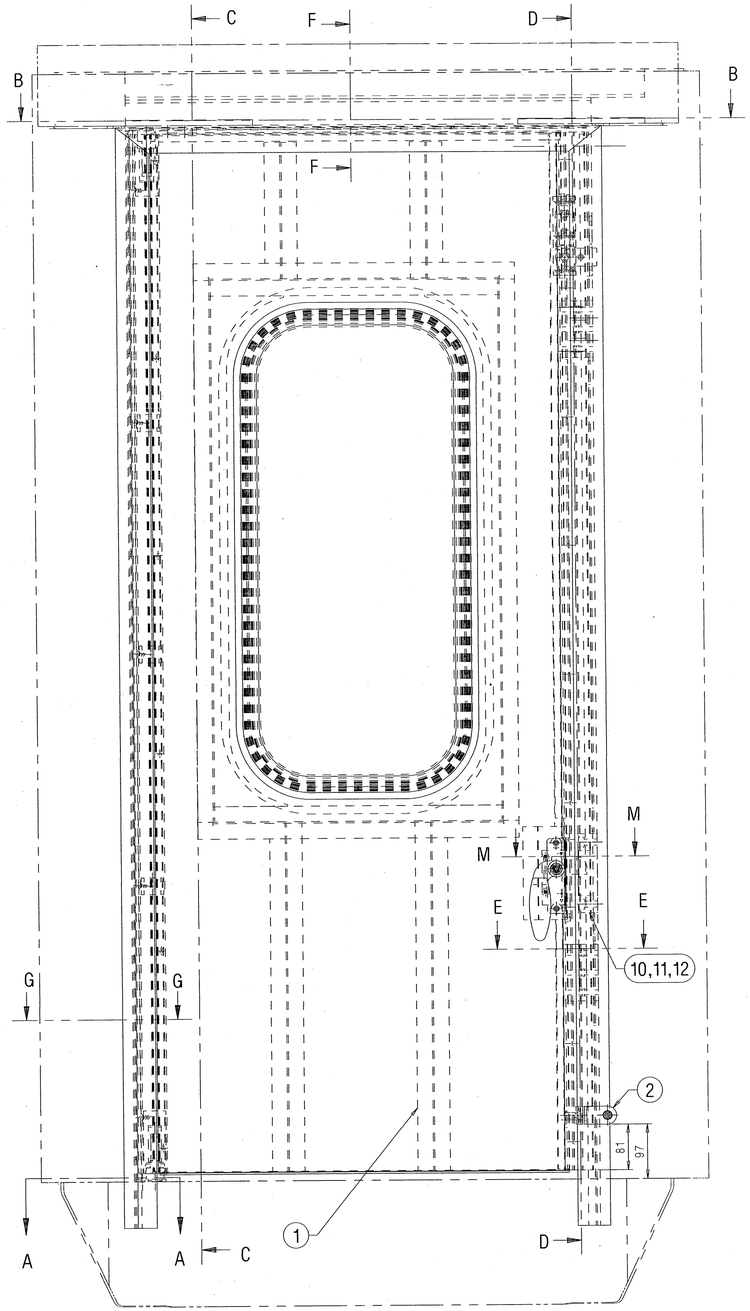

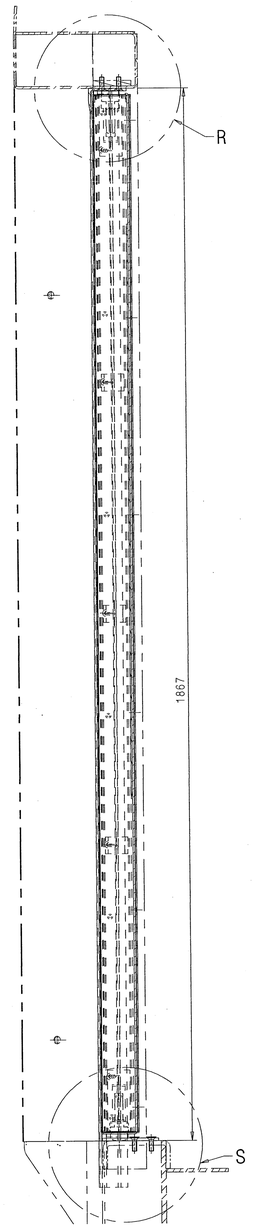

SECTION C-C
SCALE 1:5

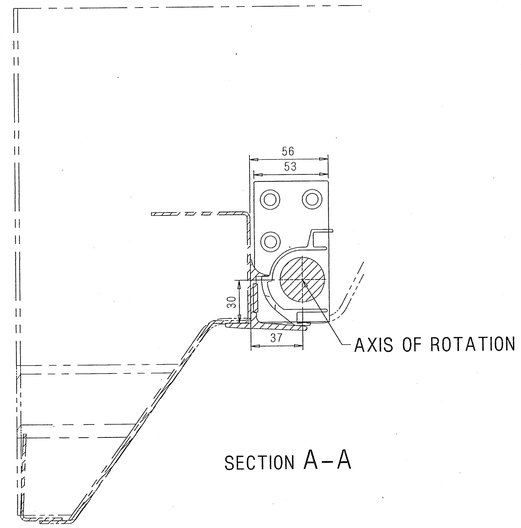

SECTION A-A

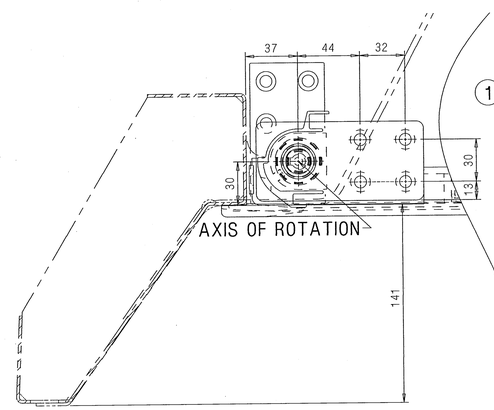

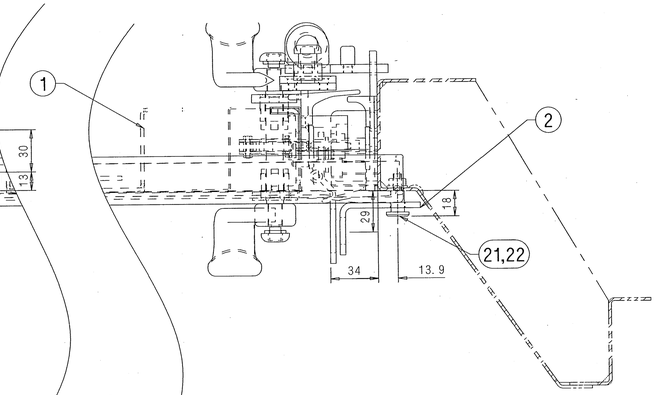

SECTION B-B
SCALE 1:2

(FOR OFFICE USE ONLY)

Entered
Into
Date Ent
11 AUG 2010

WELD LENGTH	ITEM	DESCRIPTION & DIMENSIONS	GPASSLY	DETAIL DRG	MATL. & SPEC.	REMARKS
NIL M	GROUP	BODY SIDE DOOR	SUPERSEDES: LA51101 ALT b			
WEIGHT	FILE	la51101c.prt(3D)				
66.641 KG		ENTRANCE DOOR MOUNTING (R.H.)	SCALE	SE/REC		
S.AREA			1:5	CHD	MHMD	
NIL M²		FOR AC COACHES		DRN	MTRM	
~~LENGTH/DIA~~						
NIL M		RAIL COACH FACTORY, KAPURTHALA	REF.DRG.No. NIL			
~~WIDTH/THICK.~~						
NIL M		रेल कोच फैक्टरी कपूरथला	IRS	PL NO.	NIL	
HEIGHT				DRG.NO.	LA51101	
NIL M		ADE/SME	DY.CME	CDE	ALT. C	SIZE A1 SHEET 1/2

ANY MANUAL ALTERATION SHALL AUTOMATICALLY RENDER THIS DRAWING INVALID.

FOR UNTOLERANCED DIMENSIONS REFER MDG0008

DETAIL DRGS STARTING WITH "LI" ARE INTERNAL REFERENCE LISTS ONLY AND ARE NOT FOR ISSUE.

DATE OF FIRST ISSUE 28/04/2006 CGM BY

ALT.NO	ALT.DATE	ZONE	ALTERATIONS	AUTHORITY

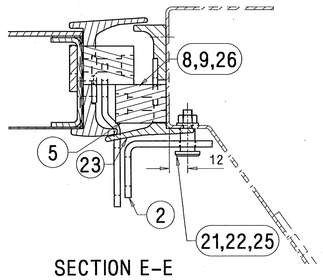

SECTION E-E
SCALE 1:2

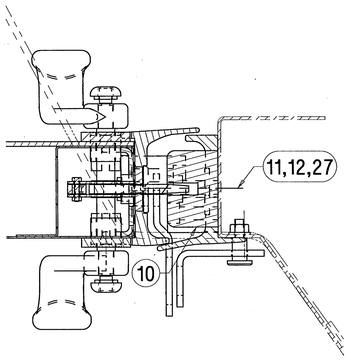

SECTION M-M
SCALE 1:2

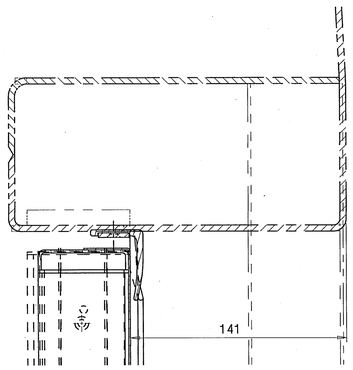

SECTION F-F
SCALE 1:2

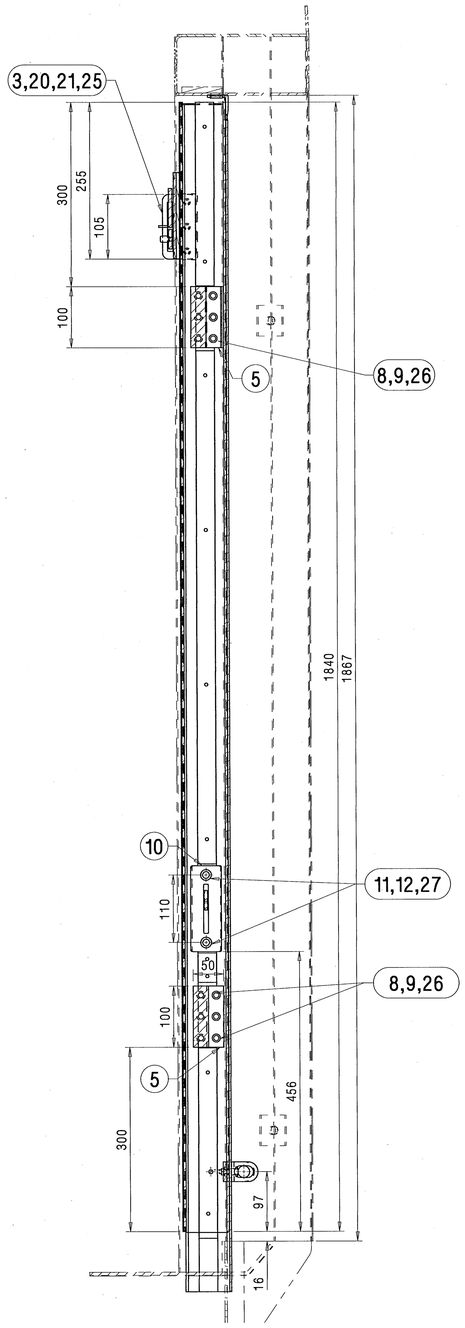

SECTION D-D
SCALE 1:5

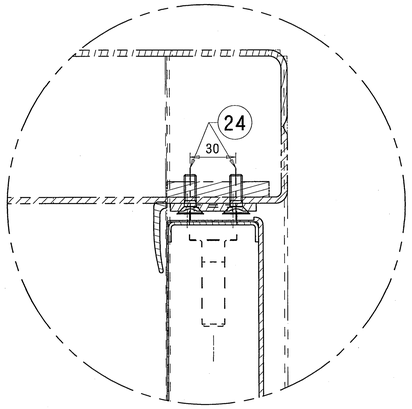

DETAIL AT- R
SCALE 1:2

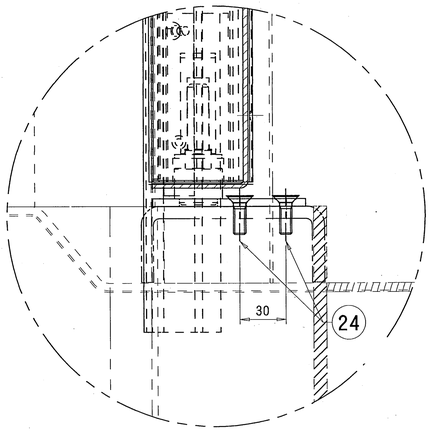

DETAIL AT- S
SCALE 1:2

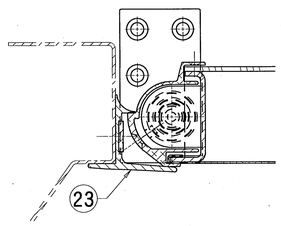

SECTION G-G
SCALE 1:2

ALT.NO	ALT.DATE	ZONE	ALTERATIONS	AUTHORITY
a	06/12/2007	F15 I, F17 J17 H, I15 J15 K1 I, H15 J16 F15 NA	1. ITEM NOS. 21 AND 22 ADDED. 2. QTY. OF ITEM NOS. 6 TO 9 WERE 8 EACH AND WAS 6 FOR ITEM NO. 20. 3. DETAIL DRG. WAS LA51120 FOR ITEM NO. 2. 4. ITEM NOS. 6, 8 AND 11 WERE SS SLOTTED CSK HEAD SCREWS OF M8X50, M5X50 AND M10X70 RESPCTLY. 5. ITEM NO. 4 DELETED. 6. NOTE NOS. 1 AND 2 REVISED AND NOTE 3 ADDED. 7. ITEM NOS. 7, 9 AND 12 WERE SS HEX NUT M8, M5 AND HEX NUT M10 RSPCTVLY. 8. DESCRIPTION WERE LOCKING PLATE AND STOPPER MALE FOR ITEM NOS. 2 AND 5 RSPCTVLY. 9. MATL. SPEC. AND DESCRIPTION UPDATED FOR ITEM NO. 20. 10. DRG UPDATED FOR MODIFICATIONS IN ITEM NOS. 1 TO 4 AND 10.	DIC NO. MD070033 DTD. 25/6/07
b	03/06/2008	F15 G15, H15 F17 G2, G6, H6 I16 J14 K1	1. ITEM NOS. 23 AND 24 ADDED. 2. ITEM NOS. 13 TO 19 DELETED. 3. QTY. OF ITEM NO. 20 WAS 12. 4. ITEM NOS. 6, 7, 8 AND 9 CORRECTLY MARKED. 5. SIZE WAS M5X50 FOR ITEM NO. 8. 6. WEIGHT WAS NIL. 7. NOTE NO. 1 UPDATED AND NOTE NO. 2 DELETED.	DIC NO. MD080019 DTD. 17.05.08
c	17/07/2010	J2, J6 I10 F15, J10 J17 I12, J12 K14 G8, G13 H5	1. DRAWING UPDATED FOR MODIFICATIONS IN ITEM NOS. 10 AND 23. 2. ITEM NOS. 25, 26 AND 27 ADDED. 3. SLTD. HD. SCREWS WERE STAR HD. SCREWS FOR ITEM NOS. 20 AND 24. 4. DESCRIPTION WAS STOPPER MALE FOR ITEM NO. 5. 5. QTY. OF ITEM NO. 3 WAS 2. 6. QTY. OF ITEM NOS. 20, 21 AND 25 WERE 6, 7 AND 7. 7. WEIGHT WAS 68 KG. 8. DIM. 44 AND 50 WERE 29 AND 55. 9. DIMS. 80, 105 DELETED.	DIC. NO. MD100013

पैकेज में प्रविष्टियां की Entered Into Package Date

31 AUG 2010

(FOR OFFICE USE ONLY)

27	SPRING WASHER B10	2	LIHW09	IS: 3063-1994	ITEM-21 COATING TO MDTS 057
26	SPRING WASHER B8	6	LIHW09	IS: 3063-1994	ITEM-20 COATING TO MDTS 057
25	SPRING WASHER B6	4	LIHW09	IS: 3063-1994	ITEM-19 COATING TO MDTS 057
24	STAINLESS STEEL SLTD CSK FLAT HD SCREW M8X30-(A2-70 TO IS:1367 PT.14)	7	NIL	IS: 1365-2005	NIL
23	LOCATION OF EXTERNAL SEALING	1	LA52103	NIL	NIL
22	THREADED PIN	1	LA51141	NIL	NIL
21	STAINLESS STEEL PREVAILING TORQUE TYPE HEX NUT ISO7040-M5-(A2-70 TO IS:1367 PT.14)	4	NIL	IS: 7002-2005	NIL
20	STAINLESS STEEL FLAT SLTD CSK HD SCREW M8X30 ISO2009-(A2-70 TO IS:1367 PT.14)	3	NIL	IS: 1365-2005	NIL
~~19~~	~~SEALING RIVET A4.8X17.8~~	~~17~~	~~NIL~~	BEST NR. 319725 Al-Leg-1.4571	Fa. Tit Gemeyer
~~18~~	~~GASKET FIXING PLATE~~	~~1~~	~~LG51105~~	~~NIL~~	~~NIL~~
~~17~~	~~TOP GASKET~~	~~1~~	~~LG51106~~	~~NIL~~	COLOUR BLACK
~~16~~	~~FACING BRICK GASKET~~	~~1~~	3 10113.0. 22.120.105	~~MDTS 030~~	COLOUR BLACK
~~15~~	~~GASKET FIXING PLATE~~	~~1~~	3 10113.0. 22.120.106	C-K 201 XZG Ni 12	~~RDSO/SPEC.~~
~~14~~	~~GASKET FIXING PLATE~~	~~1~~	3 10113.0. 22.120.110	C-K 201 XZG Ni 12	~~RDSO/SPEC.~~
~~13~~	~~GASKET, PIVOT SIDE~~	~~1~~	3 10113.0. 22.120.109	~~MDTS 030~~	COLOUR BLACK
12	STAINLESS STEEL PREVAILING TORQUE TYPE HEX NUT ISO7040-M10-(A2-70 TO IS:1367 PT.14)	2	NIL	IS: 7002-2005	NIL
11	STAINLESS STEEL HEX SOCKET HD CAP SCREW ISO4762-M10X50-(A2-70 TO IS:1367 PT.14)	2	NIL	IS: 2269-2006	NIL
10	BLOCK FOR DOOR LOCK	1	LA51106	NIL	NIL
9	STAINLESS STEEL PREVAILING TORQUE TYPE HEX NUT ISO7040-M8-(A2-70 TO IS:1367 PT.14)	6	NIL	IS: 7002-2005	NIL
8	STAINLESS STEEL HEX SOCKET HD CAP SCREW ISO4762-M8X50-(A2-70 TO IS:1367 PT.14)	6	NIL	IS: 2269-2006	NIL
~~7~~	~~STAINLESS STEEL PREVAILING TORQUE TYPE HEX NUT ISO7040-M5-(A2-70 TO IS:1367 PT.14)~~	~~4~~	~~NIL~~	~~IS: 7002-2005~~	~~NIL~~
~~6~~	~~STAINLESS STEEL HEX SOCKET HD CAP SCREW ISO4762-M5X50-(A2-70 TO IS:1367 PT.14)~~	~~4~~	~~NIL~~	~~IS: 2269-2006~~	~~NIL~~
5	STOPPER	2	LA51125	NIL	NIL
~~4~~	~~STOPPER MALE~~	~~2~~	~~LA51125~~	~~NIL~~	~~NIL~~
3	SAFETY PLATE	1	LA51127	NIL	NIL
2	LOCKING ANGLE	1	LA51142	NIL	NIL
1	BODY SIDE ENTRANCE DOOR (R.H)	1	LA51102	NIL	NIL

ITEM	DESCRIPTION & DIMENSIONS	QPASSLY	DETAIL DRG	MATL. & SPEC.	REMARKS

WELD LENGTH	NIL M
WEIGHT	66.641 KG
S.AREA	NIL M^2
~~LENGTH/DIA~~	NIL M
~~WIDTH/THICK.~~	NIL M
HEIGHT	NIL M

GROUP: BODY SIDE DOOR
SUPERSEDES: LA51101 ALT b
FILE: la51101c.prt(3D)

ENTRANCE DOOR MOUNTING (R.H.)

FOR AC COACHES

RAIL COACH FACTORY, KAPURTHALA

रेलकोच फैक्टरी कपूरथला

IRS

ADE/SME 29/8/10 DY.CME 29/8/10

SCALE 1:5	SSE/REC	27.8.10	
	CHD	MHMD	14-8-10
	DRN	MTRM	19/8/10

REF.DRG.No. NIL

PL NO. NIL

DRG.NO. LA51101

CDE ALT. C SIZE A1 SHEET 2/2

NOTE: -
1. ITEM NOS. 2 ALONG WITH 22, 3, 5 & 10 TO BE FIXED IN REFERENCE TO LOCKING PLATE, SAFETY CATCH, STOPPER MALE & DOOR LOCK ARRANGEMENT RESPECTIVELY.
2. ~~SUITABLE CUT SHALL BE GIVEN IN ITEM NOS. 15 & 16 TO ACCOMODATE ITEM NOS. 3, 5 AND 10.~~
3. APPROPRIATE DRILLING AND TAPPING SHALL BE DONE TO SUIT AT SITE.

ANY MANUAL ALTERATION SHALL AUTOMATICALLY RENDER THIS DRAWING INVALID.

DETAIL DRGS STARTING WITH "LI" ARE INTERNAL REFERENCE LISTS ONLY AND ARE NOT FOR ISSUE.

FOR UNTOLERANCED DIMENSIONS REFER MDG0008

DATE OF FIRST ISSUE 28/04/2006 CGM BY

ALT.NO	ALT.DATE	ZONE	ALTERATIONS	AUTHORITY

VIEW FROM OUTSIDE

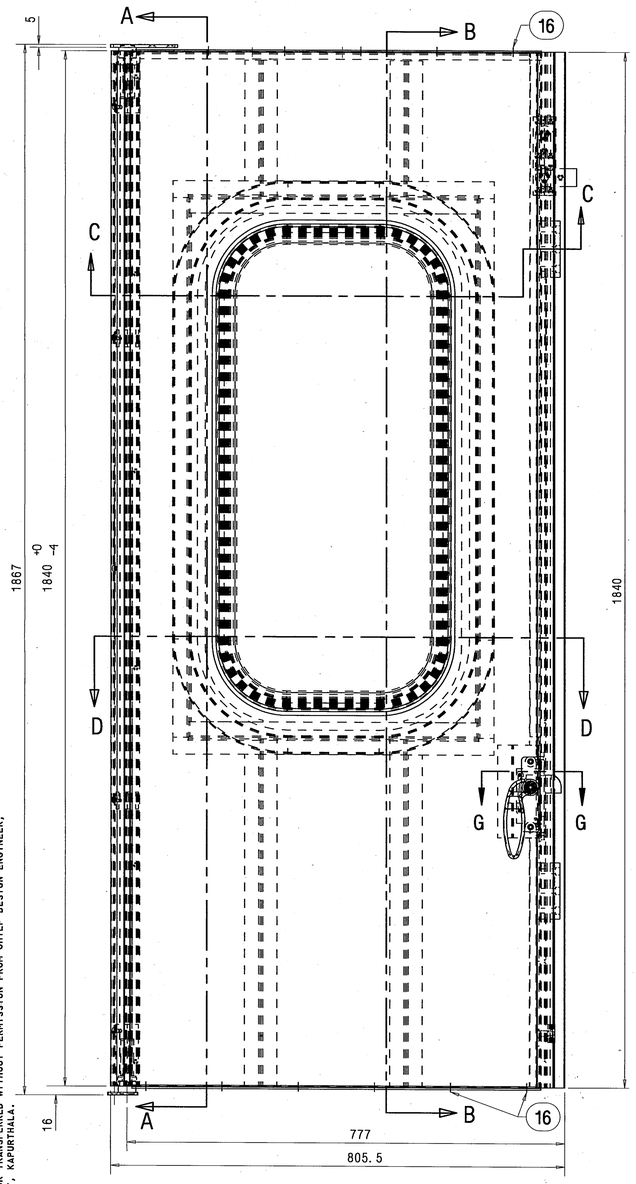

VIEW FROM INSIDE

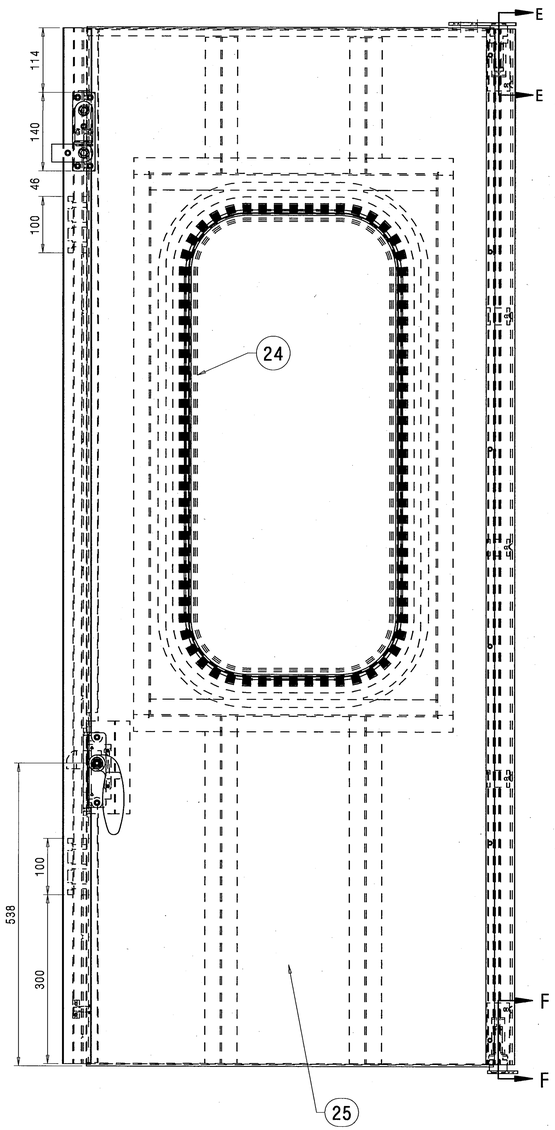

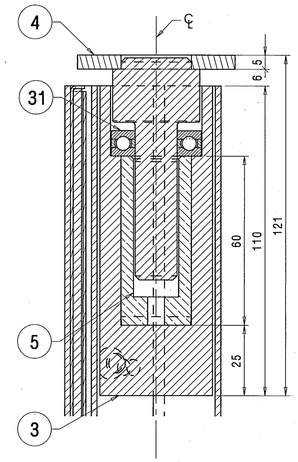

SECTION-EE

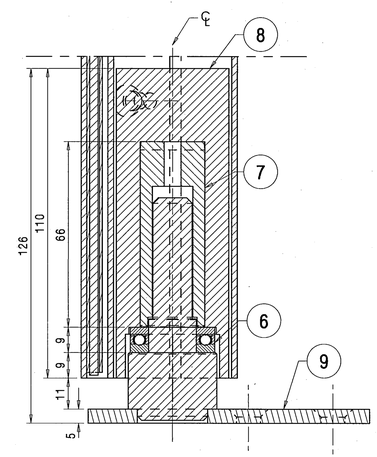

SECTION F-F

(FOR OFFICE USE ONLY)

प्रवेश
Entered
में
into
पंजिका में
Date Reg.
13 DEC 2011

THIS DRAWING IS THE INTELLECTUAL PROPERTY OF RAIL COACH FACTORY, KAPURTHALA. THIS DRAWING SHOULD NOT BE REPRODUCED, ALTERED, USED FOR MANUFACTURING OF COMPONENTS, SOLD OR TRANSFERRED WITHOUT PERMISSION FROM CHIEF DESIGN ENGINEER, RAIL COACH FACTORY, KAPURTHALA.

WELD LENGTH	ITEM	DESCRIPTION & DIMENSIONS	QPASSLY	DETAIL DRG	MATL. & SPEC.	REMARKS
NIL M	GROUP	BODY SIDE DOOR	SUPERSEDES:	LA51102 ALT c		
WEIGHT	FILE	la51102d.prt(3D)				
60.830 KG		BODY SIDE ENTRANCE DOOR (R.H)	SCALE	S&E/REC		
S.AREA			1:5	CHD	YKSH	
NIL M²				DRN	MTRM	
~~LENGTH/DIA~~						
NIL M		RAIL COACH FACTORY, KAPURTHALA	REF.DRG.No.	NIL		
~~WIDTH/THICK.~~						
NIL M		रेल कोच फैक्टरी कपूरथला	IRS	PL NO.	NIL	
HEIGHT				DRG.NO.	LA51102	
1.867 M		ADE/SME DY.CME N.R	CDE	ALT. d	SIZE A1	SHEET 1/2

ANY MANUAL ALTERATION SHALL AUTOMATICALLY RENDER THIS DRAWING INVALID.

FOR UNTOLERANCED DIMENSIONS REFER MDG0008

DETAIL DRGS STARTING WITH "LI" ARE INTERNAL REFERENCE LISTS ONLY AND ARE NOT FOR ISSUE.

DATE OF FIRST ISSUE 24/04/2006 CGM BY

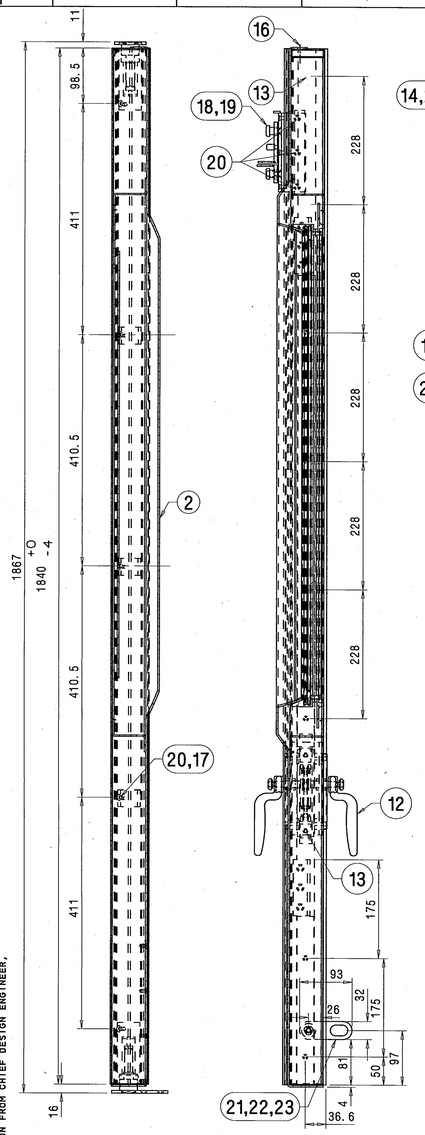

SECTION-AA

SECTION-BB

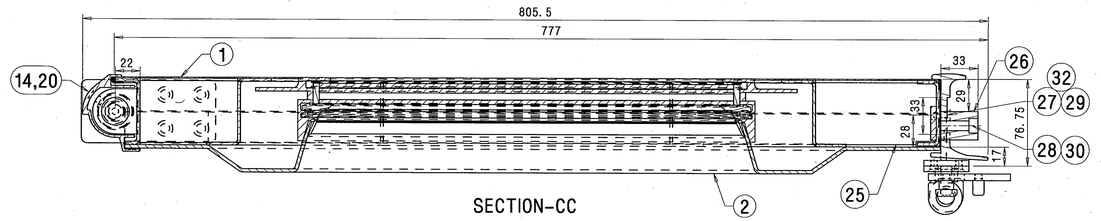

SECTION-CC

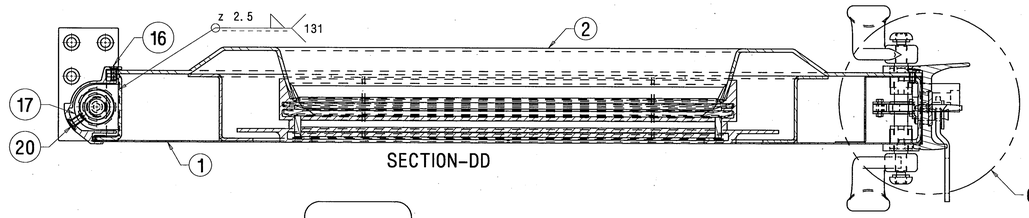

SECTION-DD

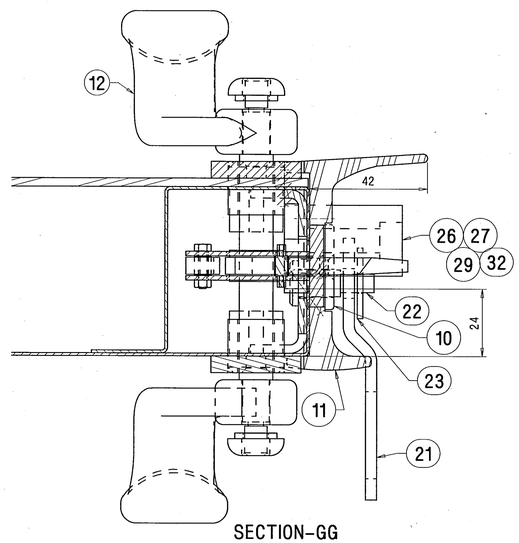

SECTION-GG

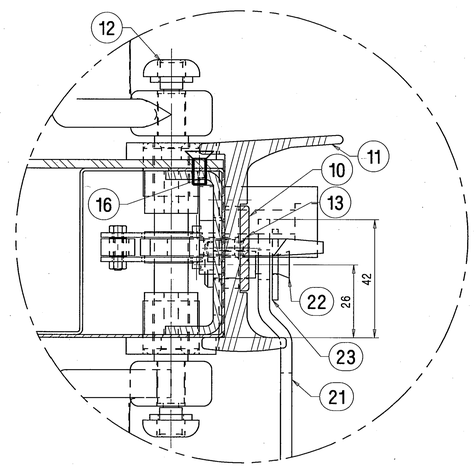

DETAIL AT- G
SCALE 1:1

(FOR OFFICE USE ONLY)

NOTE:

1. THE INSIDE OF THE DOOR LEAVES SHALL BE FILLED WITH PHENOL RESIN TO IS:13204-1991 ALTERNATIVELY THERMO REACTIVE FOAM TO MAKE THE DOOR LEAVES AS SANDWICH CONSTRUCTION FOR WEIGHT REDUCTION.
2. DOOR ASSLY SHALL BE PAINTED AS PER APPLICABLE COLOUR SCHEME OF COACH FOR INTERIOR & EXTERIOR OF THE DOOR.
3. THE WEIGHT OF THE DOOR INCLUDING ALL COMPONENTS SHALL NOT EXCEED 70 KGS.
4. THE DOOR SHALL BE TESTED FOR FIRE RETARDANCE AS PER APPENDIX-6 OF UIC-564(2)-OR. THE SUPPLIER SHALL GET THE DOORS TESTED FROM A REPUTED FIRM/LABORATORY AND SHALL SUPPLY A CERTIFICATE IN THIS REGARD.
5. DOORS SHALL MEET THE MECHANICAL STRENGTH REQUIREMENTS AS DESCRIBED IN APPENDIX-9 OF UIC 566.
6. THE SUPPLIER SHALL FIX METALLIC STICKERS ON EACH DOOR MENTIONING NAME OF THE SUPPLIER AND MONTH OF SUPPLY OF DOOR TO RCF. THESE STICKERS SHALL NOT BE VISIBLE TO THE PASSENGERS EASILY.
7. THE SUPPLIER SHALL SUPPLY ONE PROTOTYPE OF DOORS FOR APPROVAL BEFORE COMMENCING BULK SUPPLY.
8. ~~FRP PARTS SHALL BE PAINTED IN ACCORDANCE WITH THE PAINTING SYSTEM MENTIONED IN MDTS.118, AND STEEL PARTS SHALL BE PAINTED IN ACCORDANCE WITH THE PAINTING SYSTEM MENTIONED IN MDTS.094.~~
9. ~~ALTERNATIVELY, ITEM NO. 24 i.e. MAIN DOOR WINDOW ARRANGEMENT FOR ENTANCE DOOR TO DRAWING NO. LW54169 MAY BE USED.~~
10. STAINLESS STEEL ELECTRODE OF SAME COMPOSITION AS PER TABLE-3 OF RDSO/SPEC. C-K:201 TO BE USED FOR WELDING.
11. ALL WELDED AREAS TO BE PICKLED & PASSIVATED BEFORE SURFACE TREATMENT.
12. ONE NO. SPACER 2.5THK. XID= Ø 17.5XOD= Ø 30.5 OF AISI:304 TO BE SUPPLIED WITH EACH DOOR.

ALT.NO	ALT.DATE	ZONE	ALTERATIONS	AUTHORITY
b	04/06/2008	E15 H15 K4 I,J17 C13 I15,I8 G,H17 G15 I,J9 J,K14 J4	1. ITEM NO 31 ADDED. 2. ITEM NO 15 DELETED. 3. NOTE NOS. 10 TO 12 ADDED. 4. REFERENCE DRAWINGS WERE LG51133,LG51138,LG51122,LG51125,LA51133 AND LA51134 FOR ITEM NOS.3,4,5,7,8 AND 9 RSPCTVLY. 5. DIMS. 6 AND 121 WERE 2 AND 117 RSPCTVLY. 6. DESCRIPTION AND MATL. SPEC. WERE BEARING AND SKF-51202 FOR ITEM 6. 7. QPASSLY WERE 34 AND 18 FOR ITEM NOS. 16 AND 20. 8. SIZE OF SCREW WAS M6X16. 9. INTERIOR COLOUR WAS TURQUOISE BLUE FOR S.NOS. 2,4,5 AND 7 IN NOTE NO. 2 10. WEIGHT AND HEIGHT WERE NIL. 11. SR. NO. 8 ADDED IN NOTE NO. 2.	DIC NO. MD080019 DTD. 17.05.08
c	17/07/2010	K4 F17 F15 G17 K14,B12 I7,H7 A12 I10,J10	1. NOTE NO. 9 DELETED. 2. REFERENCE DRAWING WAS LW54165 FOR ITEM NO. 24 . 3. DESCRIPTION WAS STOPPER MALE FOR ITEM NO. 26. 4. QTY OF ITEM NOS. 18, 19 AND 20 WERE 2, 2 AND 23 RESPTVEY. 5. DRAWING UPDATED ACCORDINGLY. 6. WEIGHT WAS 62 KG AND DIM. 19 WAS 26. 7. DIMS. 80, 140, 80 DELETED AND 300 ADDED. 8. DIMS. 29 AND 33 WERE 24 AND 30. 9. ITEM NOS. 28 AND 30 DELETED AND ITEM NO. 32 ADDED.	DIC. NO. MD100013
d	09/12/2011	J3	NOTE- 2 REVISED & NOTE- 8 DELETED.	DY CME/D1 MD46151 VOL-10 #931

Entered in Info Directory of Date 13 DEC 2011

21	LOCKING PLATE	1	LA51123	NIL	NIL
20	STAINLESS STEEL CSK FLAT HEAD SCREW M6X10 (A2-70 TO IS:1367 PT.14)	14	NIL	IS: 7485-2005 PART-2	NIL
19	SAFETY CATCH	1	LR51122	NIL	NIL
18	SCREWING BRACKET	1	LG51155	NIL	NIL
17	SCREWING PIECE	3	LG51146	NIL	NIL
16	STAINLESS STEEL CSK FLAT HEAD SCREW M5X10 (A2-70 TO IS:1367 PT.14)	36	NIL	IS: 7485-2005 PART-2	NIL
~~15~~	~~STAINLESS STEEL CSK FLAT HEAD SCREW M5X16 (A2-70 TO IS:1367 PT.14)~~	~~5~~	~~NIL~~	~~IS: 7485-2005 PART-2~~	~~NIL~~
14	ALUMINIUM COVER FOR HINGE	1	LA51118	NIL	NIL
13	STAINLESS STEEL CSK FLAT HEAD SCREW M5X12 (A2-70 TO IS:1367 PT.14)	9	NIL	IS: 7485-2005 PART-2	NIL
12	DOOR LOCK ARRANGEMENT	1	LA51103	NIL	NIL
11	RUBBER GASKET	1	LA51132	NIL	COLOUR BLACK
10	GASKET FIXING PLATE	1	LA51143	NIL	NIL
9	LOWER BEARING ARRANGEMENT	1	LA51154	NIL	NIL
8	LOWER BUSH HOUSING	1	LA51145	NIL	NIL
7	LOWER BUSH	1	LA51146	NIL	NIL
6	SINGLE DIRECTION THRUST BALL BEARING	1	NIL	SKF-51103	NIL
5	UPPER BUSH	1	LA51147	NIL	NIL
4	UPPER BEARING ARRANGEMENT	1	LA51150	NIL	NIL
3	UPPER BUSH HOUSING	1	LA51148	NIL	NIL
2	FRP DOOR PANNEL	1	LA51130	NIL	NIL
1	OUTER DOOR SHEET ASSEMBLY	1	LA51104	NIL	NIL

32	SPRING WASHER B8	6	LIHW09	IS: 3063-1994	ITEM-20 COATING TO MDTS 057
31	SEALED SINGLE ROW DEEP GROOVE BALL BEARING	1	NIL	SKF-6002-2Z	NIL
~~30~~	~~STAINLESS STEEL PREVAILING TORQUE TYPE HEX NUT ISO7040-M5-(A2-70 TO IS:1367 PT.14)~~	~~4~~	~~NIL~~	~~IS: 7002-2005~~	~~NIL~~
29	STAINLESS STEEL PREVAILING TORQUE TYPE HEX NUT ISO7040-M8-(A2-70 TO IS:1367 PT.14)	6	NIL	IS: 7002-2005	NIL
~~28~~	~~STAINLESS STEEL HEX SOCKET HD CAP SCREW ISO4762-M5X50-(A2-70 TO IS:1367 PT.14)~~	~~4~~	~~NIL~~	~~IS: 2269-2006~~	~~NIL~~
27	STAINLESS STEEL HEX SOCKET HD CAP SCREW ISO4762-M8X50-(A2-70 TO IS:1367 PT.14)	6	NIL	IS: 2269-2006	NIL
26	STOPPER	2	LA51125	NIL	NIL
25	RIGID PHENOLIC FOAM THICKNESS=50MM	1	NIL	IS: 13204-1991	DENSITY =30KG./CU. M.
24	MAIN DOOR WINDOW ARRANGEMENT	1	LW54169	NIL	NIL
23	STAINLESS STEEL PLAIN WASHER B7 (A2 TO IS:1367 PT.14)	1	NIL	IS: 2016-1967	NIL
22	PIN	1	LA51124	NIL	NIL

WELD LENGTH	ITEM	DESCRIPTION & DIMENSIONS	QPASSLY	DETAIL DRG	MATL. & SPEC.	REMARKS
NIL M	GROUP	BODY SIDE DOOR	SUPERSEDES: LA51102 ALT c			
WEIGHT	FILE	la51102d.prt(3D)				
60.830 KG						
S.AREA						
NIL M^2						
~~LENGTH/DIA~~						
NIL M						
~~WIDTH/THICK.~~						
NIL M						
HEIGHT						
1.867 M						

BODY SIDE ENTRANCE DOOR (R.H)

RAIL COACH FACTORY, KAPURTHALA

रेल कोच फैक्टरी कपूरथला

IRS

SCALE	SGE/REC	
1:5	CHD	YKSH
	DRN	MTRM
REF.DRG.No. NIL		

PL NO. NIL

DRG.NO. LA51102

ALT. d | SIZE A1 | SHEET 2/2

ADE/SME | DY.CME | N.R | CDE

CGM BY

ANY MANUAL ALTERATION SHALL AUTOMATICALLY RENDER THIS DRAWING INVALID.

DETAIL DRGS STARTING WITH "LI" ARE INTERNAL REFERENCE LISTS ONLY AND ARE NOT FOR ISSUE.

FOR UNTOLERANCED DIMENSIONS REFER MDG0008

DATE OF FIRST ISSUE 24/04/2006

THIS DRAWING IS THE INTELLECTUAL PROPERTY OF RAIL COACH FACTORY, KAPURTHALA. THIS DRAWING SHOULD NOT BE REPRODUCED, ALTERED, USED FOR MANUFACTURING OF COMPONENTS, SOLD OR TRANSFERRED WITHOUT PERMISSION FROM CHIEF DESIGN ENGINEER, RAIL COACH FACTORY, KAPURTHALA.

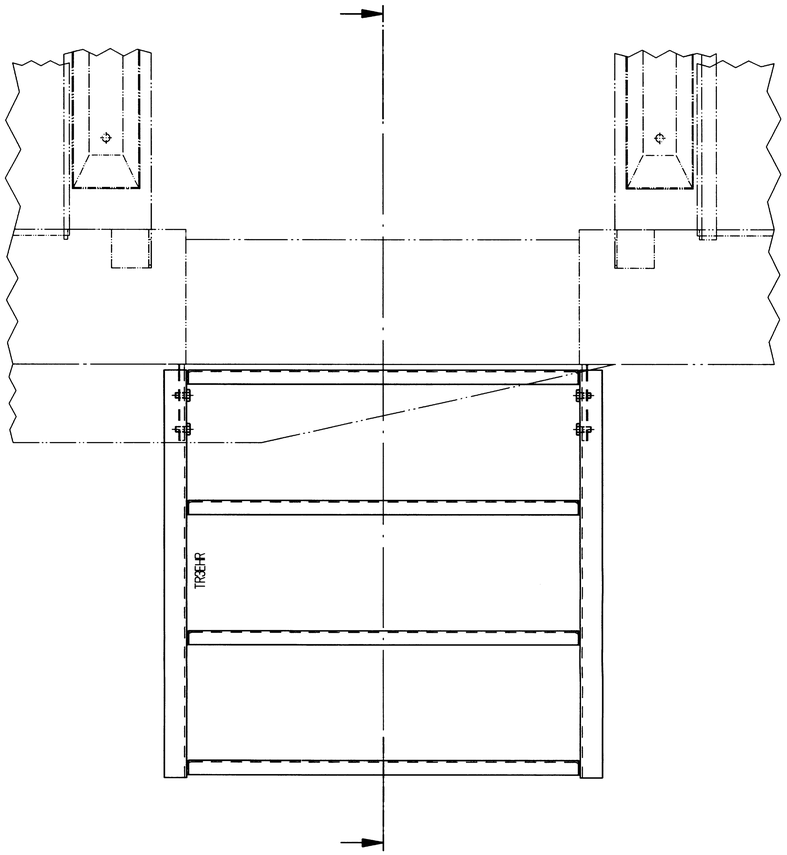

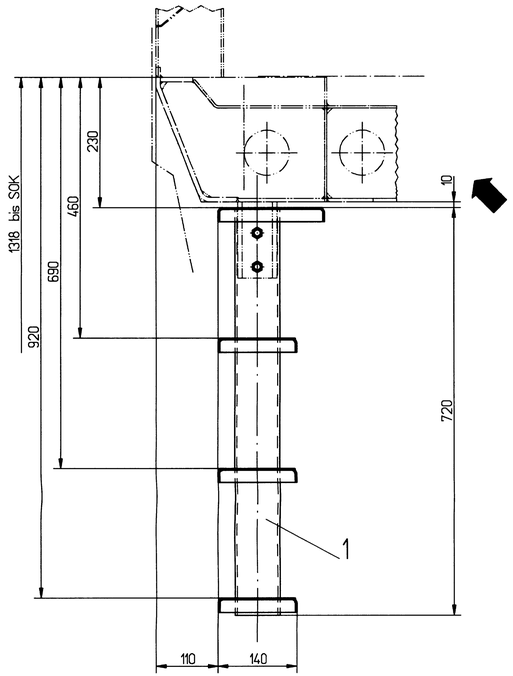

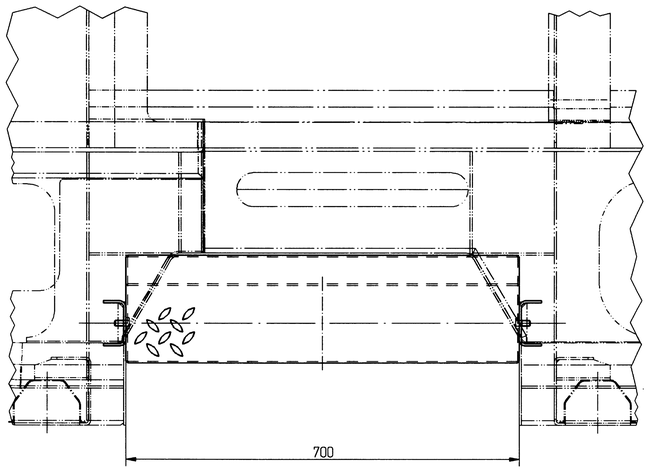

(FOR OFFICE USE ONLY)

22.02.00 10:08

Für diese Techn. Unterlage behalten wir uns alle Rechte vor, auch für den Fall der Patenterteilung oder eingetragenen Gebrauchsmusterschutzes. Jede Verwertung oder Mitteilung, Weitergabe an Dritte, soweit nicht zulässig, noch in anderer Weise mißbräuchlich verwertet werden.

This drawing is restricted for use in accordance to clause 5 and 15 of the contract for Transfer of Technology for Multi Purpose Wide Wide Speed Coaches B/G/6/75mm/Ms-35/DE/Call/LM/Coach dated 16.10.95 of the Project R-Coach.

Diese Zeichnung darf nur verwendet werden im Zusammenhang mit den Klauseln 5 und 15 des Technologietransfervertrages für Leichtbau-Hochgeschwindigkeitswagen aus Metall Breitspur B/G/6/75mm/Ms-35/DE/Call/LM/Coach vom 16.10.95 des Projekts Reisezugwagen R.

ZEICHNUNG DARF NUR IM CAD-SYSTEM GEÄNDERT WERDEN

Verwendbar für:

INDIAN RAILWAYS

Maße ohne Toleranzangabe: ISO 2768-mK DIN 8570 BF

Oberflächen DIN ISO 1302

Ausgabe
Datum
Maßstab 1 : 5

A	035-013836	03.98	Tol		Datum	Name
B	035-016141	5.98	GB	Bearb.	12.97	Görtner
C	035-033392	02.2000	Ehr	Gepr.	12.97	Ehrenreich
				Norm.	12.97	Ehrenreich
				Fert.		

Linke-Hofmann-Busch GmbH
Salzgitter-Watenstedt

Tritt vollst., Anbau

step complete, mounting

1 10113.0.10.100.001

Blatt 01

CAD | DNR 0716122 | 01 BL

Zust. | Änderung | Datum | Name | Urspr. | Ers. f. | Ers. d.

FKSJDM
05.05.99 13:57

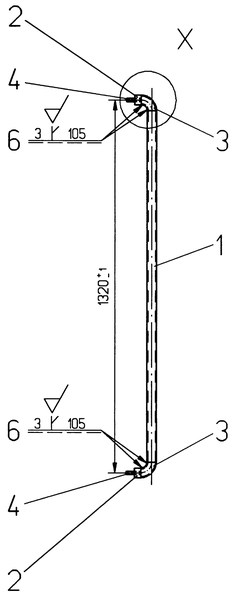

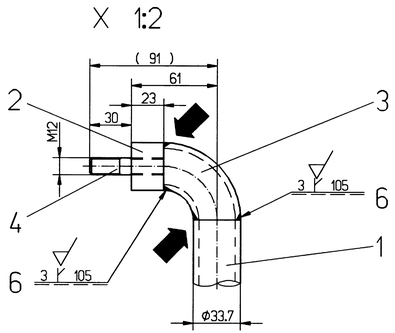

Pulverbeschichtung:
- RAL 9006
- Pulver Interpon 600JW021D
- TSD ≧ 80 µm

powder coating:
- RAL 9006
- powder Interpon 600JW021D
- TSD ≧ 80 µm

Für diese Unterl. übrige gewerbl. Schutzrechte und Urheberrechte vorbehalten. Sie darf ohne Erlaubnis weder vervielfältigt noch Dritten zugänglich gemacht werden.

This drawing is restricted for use in accordance to clause 15 and 16 of the contract for Transfer of Technology for all Metall Light Weight High Speed Coaches 16/67/mm/Mk.35/DEV.Ldd/LM/Coach dated 16.10.95 of the Project RK-Coach.

Diese Zeichnung darf nur verwendet werden im Zusammenhang mit den Klauseln 15 und 16 des Technologietransfervertrages für alle Leichtbauweise Hochgeschwindigkeitswagen aus Metall Breitspur16/7/mm/Mk.35/DEV.Ldd/LM/Coach vom 16.10.95 des Projektes Reisezugwagen R.

(FOR OFFICE USE ONLY)

ZEICHNUNG DARF NUR IM CAD-SYSTEM GEÄNDERT WERDEN

Verwendbar für:

INDIAN RAILWAYS

Ausgabe
Datum

Maße ohne Toleranzangabe: ISO 2768-mK DIN 8570-BF

Oberflächen DIN ISO 1302

Maßstab 1:10

A	035-026580	05.05.99	Sud		Datum	Name
				Bearb.	03.98	Wahl
				Gezr.	03.98	Schlorff
				Norm.	03.98	Wahl
				Fert.		
Zust.	Änderung	Datum	Name	Ursprr.		

Linke-Hofmann-Busch GmbH
Salzgitter-Watenstedt

Handstange, vollst.

hand bar, complete

3 10113.0.10.210.001

Blatt 01

CAD

DNR 072141B

01 Bl.

Ers. f.

Ers. d.